ELCO Lighting

Project Name:

Fixture Type:

Date:

END FEED KIT TRACK ACCESSORY

Track Connectors · 4 finishes



FEATURES

•End Feed Kit for Outlet Box Mount for 1 Circuit Track.

DIMENSIONS

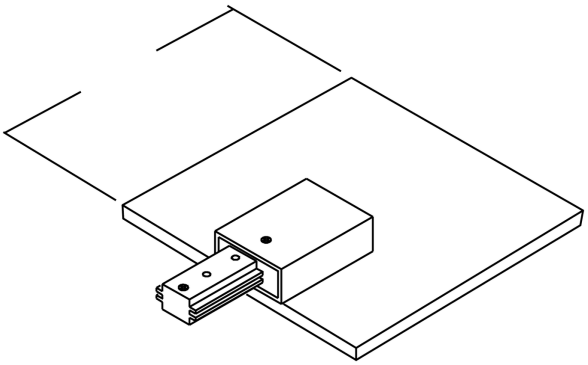

End Feed Kit Track Accessory

ITEM NUMBERS

ITEM NUMBER	FINISH
EP810B	Black
EP810BZ	Bronze
EP810N	Nickel
EP810W	White

FINISHES



Black



Bronze



Nickel



White

Item page
elcolighting.com/items/end-feed-kit-track-accessory
Every item number, IES files, downloads and the latest revision.

PART OF THESE FAMILIES

Single Circuit Track

© ELCO Lighting 2026. All rights reserved • Rev. 26 Sep 2026 • ELCO Lighting reserves the right to make specification and design changes without notice.