ELCO Lighting

Project Name:

Fixture Type:

Date:

EMERGENCY BATTERY BACKUP

Accessory



ITEM NUMBER **KEM-LD6**

FEATURES

- 90 minutes of emergency light.
- Suitable for damp location
- UL Listed (US and Canada)
- Compatible with all 3″ - 8″ Elm System Fixtures (ERT3, ERT4, ERT6 and ERT8 Series), Canless Koto™ System and Koto MAX System

DIMENSIONS

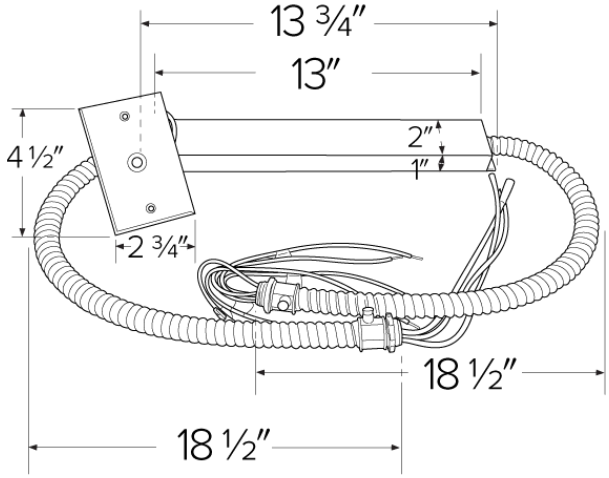

SPECIFICATIONS

Wattage	25W
Voltage	100-277V

Item page
elcolighting.com/items/emergency-battery-backup-4
Every item number, IES files, downloads and the latest revision.

PART OF THESE FAMILIES

Emergency Battery Backups

© ELCO Lighting 2026. All rights reserved • Rev. 16 Oct 2026 • ELCO Lighting reserves the right to make specification and design changes without notice.