ELCO Lighting

Project Name:

Fixture Type:

Date:

EMERGENCY BATTERY BACKUP

Accessory



FEATURES

- Single whip for J-Box mounting.
- 90 minutes of emergency light.
- 120/277V AC, 60Hz.
- Bottom lead

DIMENSIONS

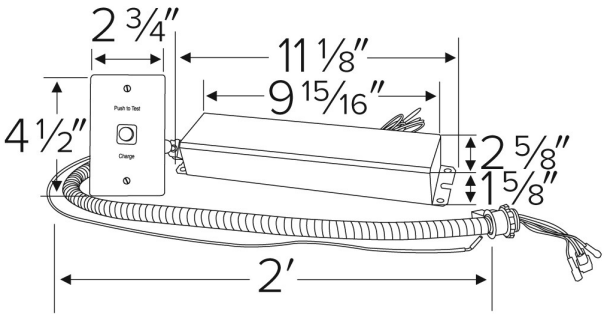

SPECIFICATIONS

Wattage	8 · 12 · 15 W
Voltage	120-277V

ITEM NUMBERS

ITEM NUMBER	WATTS	VOLTAGE
KEM-LD1	8W	120-277V
KEM-LD2	15W	120-277V

Item page
elcolighting.com/items/emergency-battery-backup-0
Every item number, IES files, downloads and the latest revision.

PART OF THESE FAMILIES

4″ Laurel Downlighting™ · 6″ Laurel™ · Emergency Battery Backups · 2″ Elm™ · Alder™ · High Tech-Lumen Alder™ · 2″ Elm™ Flexa

© ELCO Lighting 2026. All rights reserved • Rev. 13 Nov 2026 • ELCO Lighting reserves the right to make specification and design changes without notice.