ELCO Lighting

Project Name:

Fixture Type:

Date:

ELECTRONIC DRIVER ELV DIMMABLE

Transformer

For tape lights and general applications

ITEM NUMBER **DRVE24V60W**



FEATURES

- ELV Dimmable
- No minimum load
- 120V input, 0.50A, 50/60Hz
- 60W maximum
- Short circuit protection
- Class 2

DIMENSIONS

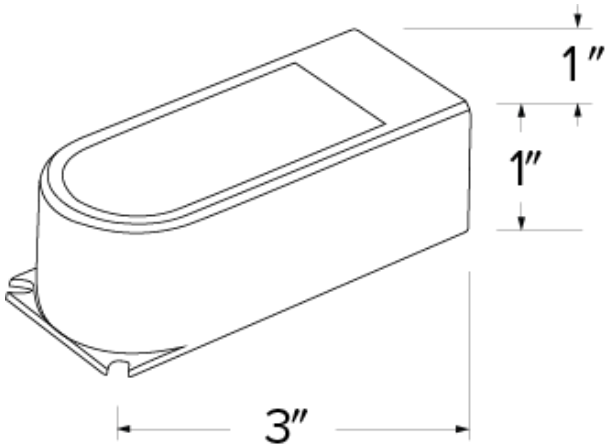

SPECIFICATIONS

Wattage	60W
Voltage	24V
Dimming	ELV

Item page
elcolighting.com/items/electronic-driver-elv-dimmable
Every item number, IES files, downloads and the latest revision.

PART OF THESE FAMILIES

2″ 24V DC Koto™ · 6″ 24V DC Koto™ · 3″ 24V DC Koto™ · 4″ 24V DC Koto™ · Tape Light Power Supply · Transformers

© ELCO Lighting 2026. All rights reserved • Rev. 09 Oct 2026 • ELCO Lighting reserves the right to make specification and design changes without notice.