ELCO Lighting

Project Name:

Fixture Type:

Date:

KOTO™ DOWNSIZER RING: 5″–8″ HOUSINGS TO 4″ ROUND TRIMLESS

Trim

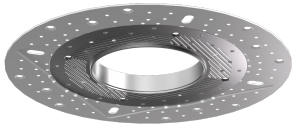

DIMENSIONS

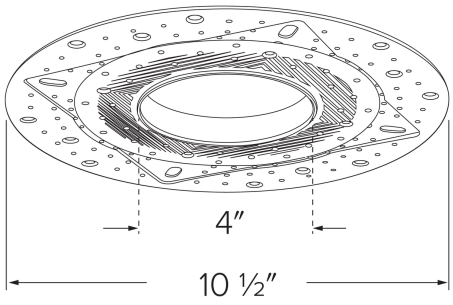

Koto™ Downsizer Ring: 5″–8″ Housings to 4″ Round Trimless

ITEM NUMBERS

ITEM NUMBER
EDSR-4SFRD

Item page
elcolighting.com/items/downsizer-ring-toconvert-5-6-7-and-8housings-down-a4-round-trimless
Every item number, IES files, downloads and the latest revision.

PART OF THESE FAMILIES

Koto™ Downsizer Ring

© ELCO Lighting 2026. All rights reserved • Rev. 10 Nov 2026 • ELCO Lighting reserves the right to make specification and design changes without notice.