ELCO Lighting

Project Name:

Fixture Type:

Date:

DEAD END — 1 OR 2 CIRCUIT TRACK

Track Connectors · 4 finishes



FEATURES

• Dead End for 1 or 2 Circuit Track.

DIMENSIONS

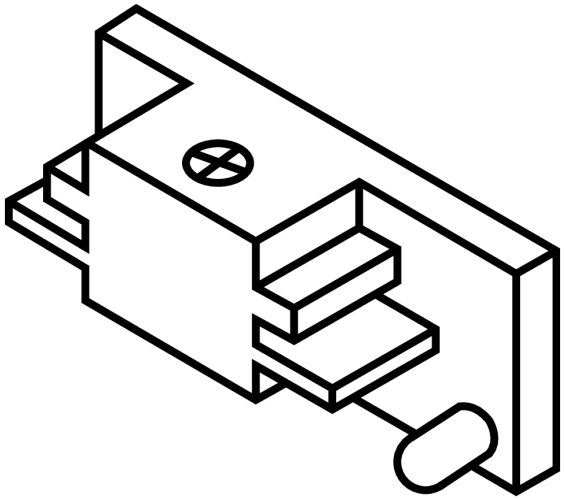

Dead End — 1 or 2 Circuit Track

ITEM NUMBERS

ITEM NUMBER	FINISH
EP812B	Black
EP812BZ	Bronze
EP812N	Nickel
EP812W	White

FINISHES



Black



Bronze



Nickel



White

Item page
elcolighting.com/items/dead-end-1-or-2-circuit-track
Every item number, IES files, downloads and the latest revision.

PART OF THESE FAMILIES

Single Circuit Track · Two Circuit Track · General Track Accessories

© ELCO Lighting 2026. All rights reserved • Rev. 26 Sep 2026 • ELCO Lighting reserves the right to make specification and design changes without notice.