ELCO Lighting

Project Name:

Fixture Type:

Date:

BIRCH™ RETROFIT

Housing

ITEM NUMBER **ELBRT**



FEATURES

- To convert an existing fixture to a Birch™ fixture
- Compatible with all sizes Birch™ trims and modules
- Encased Quick Connector for easy module installation

DIMENSIONS

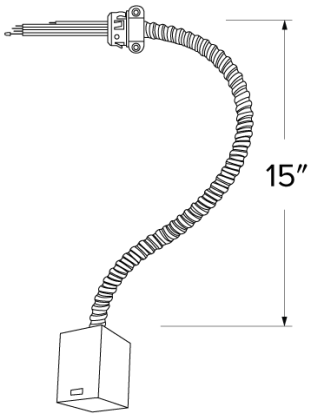

TECHNICAL DETAILS

Installation: Designed to add Birch™ System downlighting to an existing commercial application with a junction box on site.
Warranty: ELCO Products are built to last. 5-year Limited warranty.

Item page
elcolighting.com/items/birch-retrofit
Every item number, IES files, downloads and the latest revision.

PART OF THESE FAMILIES

4″ Birch™ Round · 4″ Birch™ Square · 6″ Birch™ Round · 8″ Birch™ Round

© ELCO Lighting 2026. All rights reserved • Rev. 13 Oct 2026 • ELCO Lighting reserves the right to make specification and design changes without notice.