ELCO Lighting

Project Name:

Fixture Type:

Date:

AZALEA™ LED UNDERCABINET LIGHTS

Bar



FEATURES

- Slim Line LED Undercabinet Light, white polycarbonate body, ribbed clear acrylic diffuser creates smooth lumen output.
- Linkable up to 24 ft per circuit.
- On/Off switch.
- 5' power cord and plug included
- Mini-connectors for flush unit-to-unit connection included, flush mounting clips.
- 120V AC non-dimmable LED driver.
- ETL listed for dry location.

DIMENSIONS

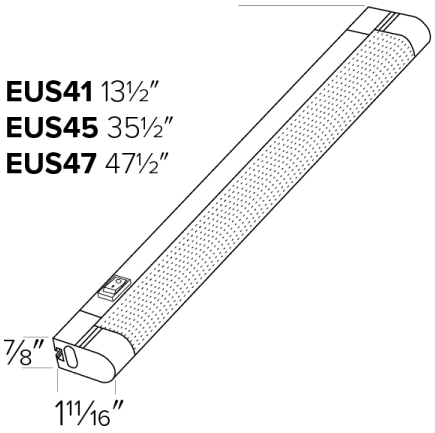

SPECIFICATIONS

Wattage	5 · 12 · 17 W
Lumens	370 · 1200 · 1600 lm
Voltage	120V
Color temp.	4000K
Lamp type	LED

ITEM NUMBERS

ITEM NUMBER	LAMP TYPE	LUMENS	WATTS	VOLTAGE	CCT	FINISH
EUS41W	LED	370 lm	5W	120V	4000K	White
EUS45W	LED	1200 lm	12W	120V	4000K	White
EUS47W	LED	1600 lm	17W	120V	4000K	White

FINISHES

White

Item page
elcolighting.com/items/azalea-led-undercabinet-lights
Every item number, IES files, downloads and the latest revision.

PART OF THESE FAMILIES

Undercabinet Bars

© ELCO Lighting 2026. All rights reserved • Rev. 13 Nov 2026 • ELCO Lighting reserves the right to make specification and design changes without notice.