ELCO Lighting

Project Name:

Fixture Type:

Date:

ACCESSORIES FOR RECESSED FIXTURES - CLIP

Accessory



DIMENSIONS

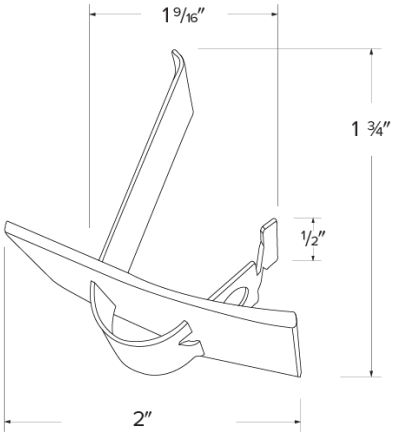

CLIP-R

SPECIFICATIONS

Accessory option	Retrofit Clips
Spring type	Torsion Spring

ITEM NUMBERS

ITEM NUMBER	SPRING TYPE
CLIP-R	—
CLIP-C	Torsion Spring

Item page
elcolighting.com/items/accessories-recessed-fixtures-clip
Every item number, IES files, downloads and the latest revision.

PART OF THESE FAMILIES

Clips

© ELCO Lighting 2026. All rights reserved • Rev. 13 Nov 2026 • ELCO Lighting reserves the right to make specification and design changes without notice.