ELCO Lighting

Project Name:

Fixture Type:

Date:

8″ ROUND 0-10V SKY PANEL™

Panel · Round



0-10V Dimmable edge-lit LED technology with glare control lens for even glow.

ITEM NUMBER **ELSP83DXCT3W**

FEATURES

- Fits 3 1/2″ and 4″ Octagon and Round junction boxes
- Fits 4″ and 6″ housings and optional mounting accessories
- 120/277V, 0-10V Dimmable
- Switch to the desired CCT: 3000K, 3500K, 4000K
- Edge-lit LED technology
- Glare controlled lens
- Wet location listed
- JA8-2025-E-Compliant
- ETL Listed
- 9″ O.D. x 5/8″ H
- Warranty: 5 years limited.

DIMENSIONS

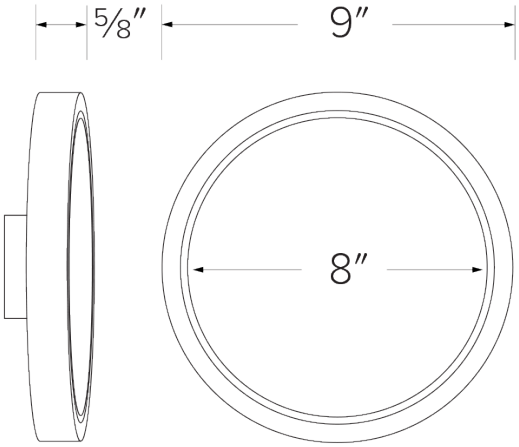

SPECIFICATIONS

Wattage	17W
Lumens	1400 lm
Voltage	120-277V
Color temp.	3000K-4000K
Dimming	0-10V
Lamp type	LED
CRI	90+
Shape	Round

FINISHES

White

Item page
elcolighting.com/items/8-round-0-10v-sky-panel
Every item number, IES files, downloads and the latest revision.

PART OF THESE FAMILIES

4″-12″ Sky Panels™

↓ Dimmer compatibility list

elcolighting.com · 0-10V Sky Panels Dimmer List

© ELCO Lighting 2026. All rights reserved • Rev. 19 Oct 2026 • ELCO Lighting reserves the right to make specification and design changes without notice.