ELCO Lighting

Project Name:

Fixture Type:

Date:

6″ SHALLOW NEW CONSTRUCTION HOUSING

Housing · 6 1/2″

ITEM NUMBER **R9H**



FEATURES

•6" Shallow New Construction Housing
•Integral thermal protector guards against improper lamping.
•Adjustable socket bracket allows for different lamp types/sizes and proper and consistent lamp positioning.
•Lamp: PAR.
•UL Listed (US and Canada) for damp location and for feed through.

DIMENSIONS

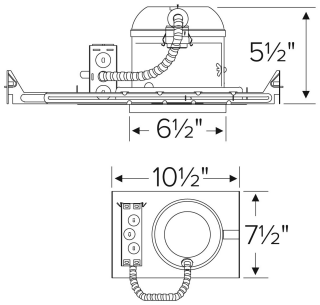

SPECIFICATIONS

Wattage	75W
Voltage	120V
Lamp type	Medium Base (E26)
Aperture	6 1/2"

Item page
elcolighting.com/items/6-shallow-new-construction-housing
Every item number, IES files, downloads and the latest revision.

PART OF THESE FAMILIES

6″ Medium Base Housings & Trims

TECHNICAL DETAILS

Construction:
- Housing adjusts in frame to accommodate up to 1 1/4" ceiling thickness.
- Aluminum housing for greater heat dissipation. Stamped galvanized steel frame.

Installation: Designed for ceiling plenums where 2x6 joists or taller are used. High strength hanger bars can easily be nailed to joists. Maximum hole cutout is 6 3/8". Suitable for T-grid and drop ceiling applications. See installation sheet for detailed information.

Junction Box: Positioned to accommodate straight conduit runs. Seven 1/2" trade size pryout conduit knockouts, 4 Romex pryouts with strain relief.

Hanger Bars: Pre-installed hanger bars with True Nail facilitate easy installation in regular lumber, engineered lumber, and laminated beams. Integral T-bar slots for easy installation in T-grids. Spans up to 24" and can be repositioned 90°. Score lines allow for tool-free hanger bar size reduction. Integral leveling flange allows for single-person installation while aligning the housing with the joists.

Electrical:
- Input Voltage: 120V AC.
- Thermally protected against improper lamping.

Trims: Compatible with ELCO 6" Line Voltage PAR trims.

Lamp: Designed for use with Medium Base (E26) PAR lamps up to 75W.

Listings:
- UL Listed (US and Canada) for Damp Location.
- UL Listed (US and Canada) for Feed Through.

Warranty: ELCO Lighting warrants products will be free from defects in materials and workmanship for a period of 3 years.

© ELCO Lighting 2026. All rights reserved • Rev. 19 Oct 2026 • ELCO Lighting reserves the right to make specification and design changes without notice.