ELCO Lighting

Project Name:

Fixture Type:

Date:

6″ LED MODULE & DRIVER WITH BAFFLE TRIM

Light Engine · Round · 6″ · 3 finishes

The perfect lighting solution for high-end residential projects with existing housings.



FEATURES

- Module includes LED Module Driver.
- Triac/ELV dimming.
- Life span of 50,000 hours L70.
- USA designed and assembled.
- Limited 5 year warranty.
- Title 24 JA8-2025-E Compliant

DIMENSIONS

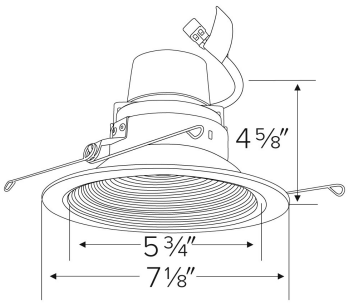

SPECIFICATIONS

Wattage	11.4 · 15.7 W
Lumens	850 · 1250 lm
Voltage	120V
Color temp.	2700K · 3000K · 3500K · 4000K · 5000K · Sunset
Dimming	Triac/ELV
Lamp type	LED
Beam angle	60° · 38° · 24° · 15°
CRI	93+
Aperture	6"
Shape	Round

FINISHES

White · Bronze · Black with White Ring

Item page
elcolighting.com/items/6-led-module-driver-baffle-trim
Every item number, IES files, downloads and the latest revision.

PART OF THESE FAMILIES

6″ Cedar™ Retrofit Modules

⬇ Dimmer compatibility list

elcolighting.com · LED Module & Driver Dimmer List

© ELCO Lighting 2026. All rights reserved • Rev. 20 Oct 2026 • ELCO Lighting reserves the right to make specification and design changes without notice.

PRODUCT NUMBER BUILDER

Specify **6" LED Module & Driver with Baffle Trim** item number (Select one) Example: **E614R0827W** Your item number:

ITEM	LUMENS	CCT	FINISH	BEAM ANGLE
E614R	**08** 850 lm **12** 1250 lm	**27** 2700K **30** 3000K **35** 3500K **40** 4000K **50** 5000K **SD** Sunset[1]	**W** White **BZ** Bronze **B** Black with White Ring	60° **-F** 38° **-N** 24° **-S** 15°

[1] Sunset, Dim to Warm technology, automatically transitions from 3000K to 1800K when dimmed

TECHNICAL DETAILS

Optics: Frosted polycarbonate module lens diffuses light evenly throughout while reducing glare with LED technology.

Trim Construction: Reflector is two piece trim for maximum color versatility. Design allows for minimal glare and a strong glare cut-off. Trim is constructed of metal for lasting durability.

Compatible Housings: EL770ICA, EL770RICA.

LED Technology:

- Color Rendering Index of 90+.
- Efficacy of 97 lumens per watt.
- Lumen Maintenance of 50,000 hours L70 Life based on LM80 standardized test results.
- Thermal management by utilizing ELCO Red heat sink.
- Instant On to Full Brightness technology.
- No LED pixelation.

Sunset: Sunset color temperature is our dim-to-warm LED technology that allows the color temperature to become warmer as the product is dimmed. Our SUNSET items start at 3000K and go as low as 1800K when dimmed. For Sunset dim technology be sure to order an item with "Sunset" in the Color Temperature (CCT) attribute.

Listings: UL Listed (US and Canada) for Wet Location. RoHS Compliant. Title 24 JA8-2025-E Compliant.

© ELCO Lighting 2026. All rights reserved • Rev. 20 Oct 2026 • ELCO Lighting reserves the right to make specification and design changes without notice.