ELCO Lighting

Project Name:

Fixture Type:

Date:

6″ LED LIGHT ENGINE WITH REFLECTOR TRIM

Light Engine · Round · 6″ · 7 finishes

The perfect lighting solution for high-end residential and light commercial projects.



FEATURES

- High efficacy LED module.
- Triac/ELV/0-10V dimming.
- Life span of 50,000 hours L70.
- USA designed and assembled.
- Limited 5 year warranty.
- 2 at the end of the item number denotes Generation 2. Please note Gen 2 and Gen 1 are not cross compatible.

DIMENSIONS

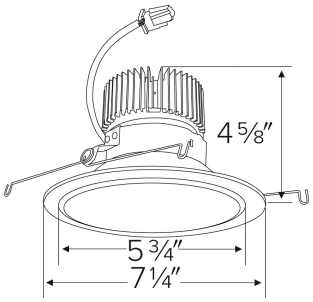

SPECIFICATIONS

Wattage	8.76 · 12.88 · 18 · 20.6 W
Lumens	850 · 1250 · 1600 · 2000 lm
Color temp.	2700K · 3000K · 3500K · 4000K · 5000K · Sunset
Lamp type	LED
Beam angle	60°
CRI	93+
Aperture	6"
Shape	Round
Generation	Gen 2

FINISHES

White

Bronze

Black with White Ring

Chrome with White Trim

Haze with White Trim

Gold with White Trim

Black with White Trim

Item page
elcolighting.com/items/6-led-light-engine-reflector-trim
Every item number, IES files, downloads and the latest revision.

PART OF THESE FAMILIES

6″ Cedar™ Housings and LED Light Engines

© ELCO Lighting 2026. All rights reserved • Rev. 19 Oct 2026 • ELCO Lighting reserves the right to make specification and design changes without notice.

PRODUCT NUMBER BUILDER

Specify **6" LED Light Engine with Reflector Trim** item number (Select one) Example: **E610C0827W2** Your item number:

ITEM	LUMENS	CCT	FINISH	GENERATION
E610C	**08** 850 lm **12** 1250 lm **16** 1600 lm **20** 2000 lm	**27** 2700K **30** 3000K **35** 3500K **40** 4000K **50** 5000K **SD** Sunset[1]	**W** White **BZ** Bronze **B** Black with White Ring	**2** Gen 2

No separate code: Finish: Chrome with White Trim, Haze with White Trim, Gold with White Trim, Black with White Trim

[1] Sunset, Dim to Warm technology, automatically transitions from 3000K to 1800K when dimmed

TECHNICAL DETAILS

Optics: Frosted polycarbonate module lens diffuses light evenly throughout while reducing glare with LED technology.

Trim Construction: Reflector is two piece trim for maximum color versatility. Design allows for minimal glare and a strong glare cut-off. Trim is constructed of metal for lasting durability.

Installation: Must be installed on a Cedar™ System frame with compatible lumen rating. Frames are available for New Construction and Remodel as IC or non-IC.

LED Technology:

- Color Rendering Index of 90+.
- Efficacy of 97 lumens per watt.
- Lumen Maintenance of 50,000 hours L70 Life based on LM80 standardized test results.
- Thermal management by utilizing ELCO Red heat sink.
- Instant On to Full Brightness technology.
- No LED pixelation.

Sunset: Sunset color temperature is our dim-to-warm LED technology that allows the color temperature to become warmer as the product is dimmed. Our SUNSET items start at 3000K and go as low as 1800K when dimmed. For Sunset dim technology be sure to order an item with "Sunset" in the Color Temperature (CCT) attribute.

Listings: UL Listed (US and Canada) for Wet Location. RoHS Compliant. California Title 24 (JA8-2025-E).

© ELCO Lighting 2026. All rights reserved • Rev. 19 Oct 2026 • ELCO Lighting reserves the right to make specification and design changes without notice.