ELCO Lighting

Project Name:

Fixture Type:

Date:

6″ LED IC AIRTIGHT SUPER SLOPED CEILING REMODEL HOUSING

Housing

ELCO Slant allows for installation in sloped ceilings ranging from 7/12 (30°) to 12/12 (45°). Can be used in insulated ceilings. Fits in 2" x 8" joist construction.

ITEM NUMBER **EL971RICA**



FEATURES

- 6″ Super Sloped Remodel Single Wall Housing.
- IC Airtight for use in insulated ceilings.
- Designed for use in 7/12 to 12/12 sloped ceiling.
- California Title 24 (JA8-2025-E).

SPECIFICATIONS

Wattage	24W
Voltage	120V

Item page
elcolighting.com/items/6-led-ic-airtight-super-sloped-ceiling-remodel-housing
Every item number, IES files, downloads and the latest revision.

DIMENSIONS

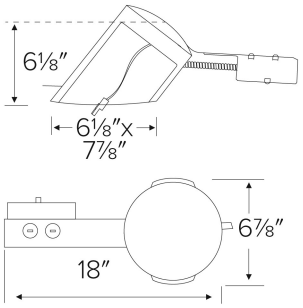

PART OF THESE FAMILIES

6″ Slant™ Super Sloped Housings and Trims

Dimmer compatibility list

elcolighting.com · Sloped Ceiling Dimmer Compatibility List

TECHNICAL DETAILS

Construction:

- IC Rated for Direct Contact with Insulation.
- Designed for use in 7/12 to 12/12 sloped ceiling.
- Housing adjusts in frame to accommodate up to 1 1/4" ceiling thickness.
- Aluminum housing for greater heat dissipation.

Installation: Designed for ceiling plenums where 2x8 joists or taller are used. Template for hole cutout is provided with each housing. See installation sheet for detailed information.

Junction Box: Positioned to accommodate straight conduit runs. Seven 1/2" trade size conduit knockouts and One 3/4" knockout. Four true pry-out knockout slots for easy Romex installation.

Electrical:

- Connection is rated for 120V or 277V input. LED module must be compatible with applicable voltage.
- For 277V step down to 120V housing consult factory.

Trims: Compatible with EL761, EL762, EL763, EL764 Series LED Inserts.

Listings:

- UL Listed for Damp Location.
- UL Listed for Direct Contact with Insulation and Combustible Material.
- UL Listed for Feed Through.
- AirTight: Per ASTM E-283.
- California Title 24 (JA8-2025-E).

Warranty: ELCO Products are built to last. 5-year Limited warranty.

© ELCO Lighting 2026. All rights reserved • Rev. 22 Nov 2026 • ELCO Lighting reserves the right to make specification and design changes without notice.