ELCO Lighting

Project Name:

Fixture Type:

Date:

6″ DIE-CAST ROUND BAFFLE TRIM FOR PAR LAMPS

Trim · 2 finishes

6" diecast round baffle trim. For use with PAR Lamps.

FEATURES

- One-piece diecast 6″ Round Baffle trim.
- Lamp: PAR20 or R20
- Twist-on trim for the Poplar™ LED Module

DIMENSIONS

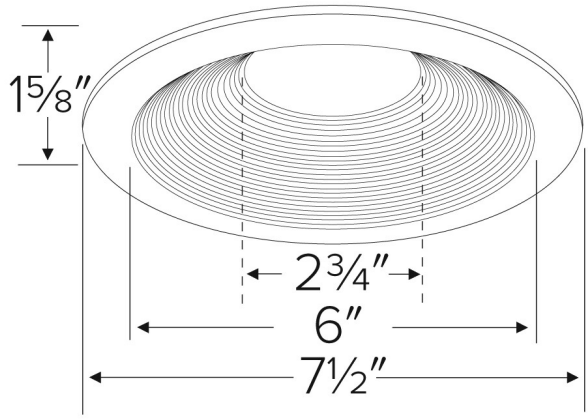

FINISHES



White



Bronze

Item page
elcolighting.com/items/6-die-cast-round-baffle-trim-par-lamps
Every item number, IES files, downloads and the latest revision.

PART OF THESE FAMILIES

6″ Poplar™ · 6″ Medium Base Housings & Trims

TECHNICAL DETAILS

Construction: Diecast aluminum with a powder coated finish.
Installation: Torsion springs securely mount trim into the housing and keep ring flush with the ceiling.
Compatible Housing: Compatible with 6” IC and non-IC housings.
Lamp: PAR Lamp

PRODUCT NUMBER BUILDER

Specify **6″ Die-cast Round Baffle Trim for PAR Lamps** item number (Select one) Example: **ELL6813W** Your item number:

ITEM	FINISH
ELL6813	**W** White **BZ** Bronze

© ELCO Lighting 2026. All rights reserved • Rev. 19 Oct 2026 • ELCO Lighting reserves the right to make specification and design changes without notice.