ELCO Lighting

Project Name:

Fixture Type:

Date:

6″ DIE-CAST LENSED REFLECTOR TRIM

Trim · 2 finishes

6" diecast Round Steam Room Trim. For use with PAR Lamps.



FEATURES

- 6" Round Steam Room Trim
- Lamp: PAR20 or R20

DIMENSIONS

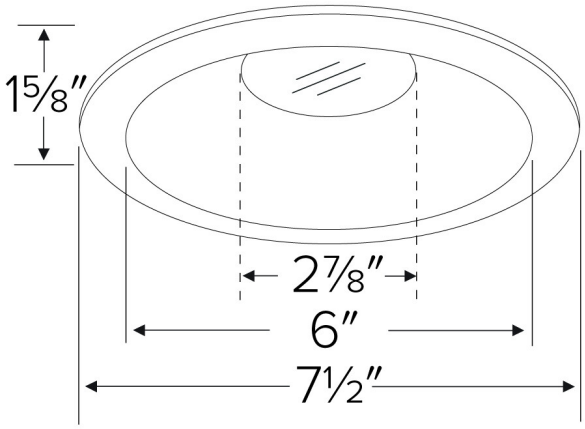

FINISHES



White



Bronze

Item page
elcolighting.com/items/6-die-cast-lensed-reflector-trim
Every item number, IES files, downloads and the latest revision.

PART OF THESE FAMILIES

6″ Medium Base Housings & Trims

TECHNICAL DETAILS

Construction: Diecast aluminum with a powder-coated finish.
Installation: Torsion springs securely mount trim into the housing and keep ring flush with the ceiling.
Compatible Housing: Compatible with 6” IC and Non-IC housings.
Lamp: PAR Lamps.

PRODUCT NUMBER BUILDER

Specify **6″ Die-cast Lensed Reflector Trim** item number (Select one) Example: **ELL6812W** Your item number:

ITEM	FINISH
ELL6812	**W** White **BZ** Bronze

© ELCO Lighting 2026. All rights reserved • Rev. 19 Oct 2026 • ELCO Lighting reserves the right to make specification and design changes without notice.