ELCO Lighting

Project Name:

Fixture Type:

Date:

6″ AIRTIGHT SMOOTH METAL CONE REFLECTOR WITH TORSION SPRINGS TRIM



Trim · Round · 6″

ITEM NUMBER **ELM301W**

FEATURES

•Reflector Cone, self-flanged.
•Lamp: (1) 42W max CFL, 75W MAX PAR30 or R30, 90W MAX PAR38, 120W BR40.
•O.D.: 7 1/4".

DIMENSIONS

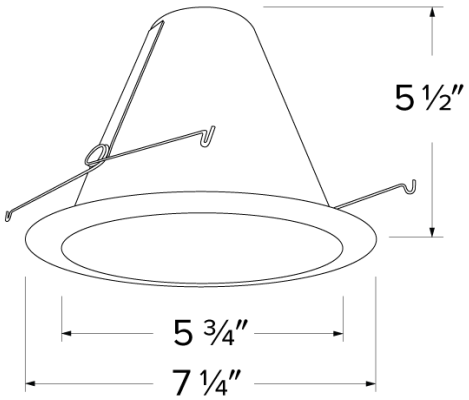

TECHNICAL DETAILS

Construction: Trim with a powder coated or anodized finish.
Installation: Clips securely mount trim into the housing and keeps ring flush with ceiling.
Compatible Housing: Compatible with 6” Integrated LED Housings.
Lamp: Compatible with Medium base (E26) PAR type.

SPECIFICATIONS

Aperture	6"
Shape	Round

FINISHES

White

Item page
elcolighting.com/items/6-airtight-smooth-metal-cone-reflector-torsion-springs-trim
Every item number, IES files, downloads and the latest revision.

PART OF THESE FAMILIES

6″ Medium Base Housings & Trims

© ELCO Lighting 2026. All rights reserved • Rev. 19 Oct 2026 • ELCO Lighting reserves the right to make specification and design changes without notice.