ELCO Lighting

Project Name:

Fixture Type:

Date:

6" 0-10V ADJUSTABLE LED INSERTS

Light Engine · Round · 6″ · 2 finishes



The Ply System 0-10V dimmable LED Inserts are engineered with energy-efficient LED technology and with a 120/277V 0-10V dimmable driver for a budget friendly 0-10V solution.

FEATURES

- 0-10V/ Triac/ELV Dimmable
- 120/277V Driver
- Lumens (Wattage): 850 lm (12.6W), 900 lm (12.6W)
- Interchangeable lens available for multiple beam angles. 36° Standard
- Adjustability of 65° tilt and 356° rotation
- 93+ CRI color rendering
- ETL Listed (US and Canada)
- Title 24 JA8-2025-E Compliant
- Life span of 50,000 hours L70

DIMENSIONS

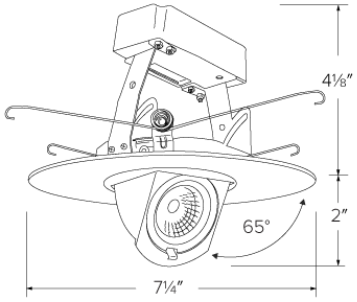

SPECIFICATIONS

Wattage	12.6W
Lumens	850 · 900 lm
Voltage	120-277V
Color temp.	2700K · 3000K
Dimming	Triac/ELV/0-10V
Beam angle	36°
CRI	93+
Aperture	6"
Shape	Round

FINISHES


White


Black

Item page
elcolighting.com/items/6-0-10v-adjustable-led-inserts
Every item number, IES files, downloads and the latest revision.

PART OF THESE FAMILIES

6″ LED Housings and LED Inserts · 6″ Ply™

PRODUCT NUMBER BUILDER

Specify **6" 0-10V Adjustable LED Inserts** item number (Select one) Example: **EL69727DXW** Your item number:

ITEM	CCT	FINISH
EL697		
	27 2700K **30** 3000K	**DXW** White **DXB** Black

© ELCO Lighting 2026. All rights reserved • Rev. 01 Nov 2026 • ELCO Lighting reserves the right to make specification and design changes without notice.

TECHNICAL DETAILS

Optics: Frosted polycarbonate lens diffuses light evenly throughout while reducing glare with LED Array technology.

Construction: For use in IC and non-IC housings. Diecast construction for lasting quality and greater heat dissipation. High quality powder coat finish preventing rust and paint cracking.

Installation: Quick connect for use with EL76FICDXA, EL76FICDXA-B, EL760ICDXA, EL760ICDXA-B, EL760ICDXA-EM5 and EL760RICDXA.

Electrical: Driver connects to120/277V power supply. High Efficiency driver with a power factor > 0.9. Start time of less than .75 seconds.

LED Technology:

- 93+ CRI color rendering.
- Lumen Maintenance of 50,000 hours L70 Life based on LM80 standardized test results.
- Thermal management by utilizing integral heat sink.
- Instant On to Full Brightness.
- No LED pixelation.

Dimmability: Works with 0-10V/Triac/ELV dimmers . Dims down to 10%. For full list of dimmers refer to the Dimmer Compatibility List.

Listings:

- ETL Listed (US and Canada) for Wet Location.
- RoHS Compliant.
- Title 24 JA8-2025-E Compliant.

Warranty: ELCO Products are built to last with a 5-year Limited Warranty.

© ELCO Lighting 2026. All rights reserved • Rev. 01 Nov 2026 • ELCO Lighting reserves the right to make specification and design changes without notice.