ELCO Lighting

Project Name:

Fixture Type:

Date:

5"/6" LED DEEP REFLECTOR INSERT

Light Engine · Round · 5″ · 6″ · 3 finishes



ELCO Lighting's inserts are engineered with energy-efficient LED technology that produces even illumination with an incredible 90+ CRI. Designed to be used for New Construction, Remodel, and Retrofit applications.

FEATURES

- Fits ELCO 5″ or 6″ Dedicated LED Recessed Housings.
- Includes Medium Base Adapter (PSA30) for retrofitting existing E26 Base housings.
- Soft white lens provides smooth lumen distribution and eliminates LED pixelation.
- Deep set LED trim reduces glare while providing area illumination.
- Title 24 JA8-2025-E Compliant.
- Life Span of 50,000 hours L70.

DIMENSIONS

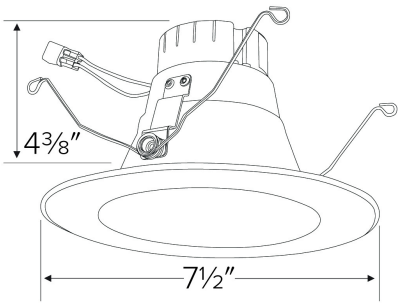

SPECIFICATIONS

Wattage	14W
Lumens	1000 · 1100 · 1200 lm
Voltage	120V
Color temp.	2700K · 3500K · 4000K
Dimming	Triac/ELV
Lamp type	LED
CRI	90+
Aperture	5" · 6"
Shape	Round

FINISHES

White | Chrome with White Ring | Haze with White Ring

Item page
elcolighting.com/items/56-led-deep-reflector-insert
Every item number, IES files, downloads and the latest revision.

PART OF THESE FAMILIES

5″ LED Housings and Inserts · 6″ LED Housings and LED Inserts

↓ Dimmer compatibility list

elcolighting.com · 6" LED Inserts (2) Dimmer List

© ELCO Lighting 2026. All rights reserved • Rev. 01 Nov 2026 • ELCO Lighting reserves the right to make specification and design changes without notice.

PRODUCT NUMBER BUILDER

Specify **5"/6" LED Deep Reflector Insert** item number (Select one) Example: **EL62527W** Your item number:

ITEM	CCT	FINISH
EL625		
	27 2700K **35** 3500K **40** 4000K	**W** White **C** Chrome with White Ring **H** Haze with White Ring

TECHNICAL DETAILS

Optics: Frosted polycarbonate lens diffuses light evenly throughout while reducing glare with LED Array technology.

Construction: For use in IC and Non-IC housings. Spun Metal for greater heat dissipation. High quality powder coat finish preventing rust and paint cracking.

Installation: Includes PSA30 medium base adapter for retrofitting existing housings. Quick connect for use with ELCO housings EL570ICA, EL570RICA, EL56FICA. PSA30 (Medium Base Socket adapter) allows for use with EL99ICA, EL99RICA, EL99FICA, EL99A, EL99RA. PSA31 (GU10 Socket Adapter, not included) allows for use with EL49ICA, EL49A, EL49RA. Can be used in IC and non-IC housings.

Electrical: Driver connects to120V power supply. High Efficiency driver with a power factor > 0.9. Ambient operating temperature -40°F (-40°C) to 104°F (40°C). Input wattage of 14W. Start time of less than .75 seconds.

LED Technology:

- 90+ CRI color rendering.
- Lumen Maintenance of 50,000 hours L70 Life based on LM80 standardized test results.
- Thermal management by utilizing integral heat sink.
- Instant On to Full Brightness.
- No LED pixelation.

Dimmability: Works with 120V Triac and ELV type dimmers. Dims down to 10%. For full list of dimmers refer to the Dimmer Compatibility List. Dims smoothly with no hot spots or flickering.

Listings:

- UL Listed (US and Canada) for Wet Location.
- RoHS Compliant.
- Title 24 JA8-2025-E Compliant.

Warranty: ELCO Products are built to last with a 5-year Limited Warranty.

© ELCO Lighting 2026. All rights reserved • Rev. 01 Nov 2026 • ELCO Lighting reserves the right to make specification and design changes without notice.