ELCO Lighting

Project Name:

Fixture Type:

Date:

5″ SLOPED CEILING LED REFLECTOR INSERTS

Light Engine · 3 finishes

Sloped Ceiling LED inserts feature an integral gimbal for ±25° adjustability. Compatible with most incandescent and electronic low voltage dimmers.



FEATURES

- 5″ Sloped Ceiling LED Inserts feature an integral gimbal for ±25° tilt adjustability.
- Compatible with most incandescent and electronic low voltage dimmers.
- California Title 24 (JA8-2025-E).
- Life Span: 50,000 hours L70.

DIMENSIONS

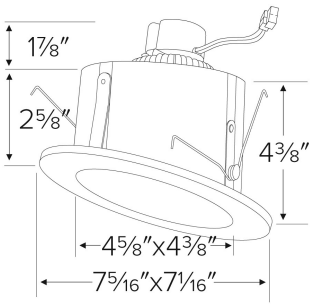

SPECIFICATIONS

Wattage	15W
Lumens	1050 lm
Voltage	120V
Color temp.	2700K-5000K
Dimming	Triac/ELV
Lamp type	LED
CRI	90+

FINISHES

White | Black with White Ring | Clear with White Ring

Item page
elcolighting.com/items/5-sloped-ceiling-led-reflector-inserts
Every item number, IES files, downloads and the latest revision.

PART OF THESE FAMILIES

5″ Slant™

↓ Dimmer compatibility list

elcolighting.com · 5-CCT Sloped Ceiling LED Inserts Dimmer List

© ELCO Lighting 2026. All rights reserved • Rev. 22 Nov 2026 • ELCO Lighting reserves the right to make specification and design changes without notice.

PRODUCT NUMBER BUILDER

Specify **5" Sloped Ceiling LED Reflector Inserts** item number (Select one) Example: **EL512CT5W** Your item number:

ITEM	CCT	FINISH
EL512		
	CT5 2700K-5000K	**W** White **B** Black with White Ring **C** Clear with White Ring

TECHNICAL DETAILS

Optics: LED light engine has frosted polycarbonate lens with reflector to diffuse light evenly while reducing glare.

Construction: Deep reflectortrim with torsion springs to be held into the housing. High quality powder coat finish preventing rust and paint cracking on metal parts. Integral gimbal allows for 25° adjustability to match slope.

Installation: Designed to install into ELCO 5" Sloped ceiling housing with torsion springs brackets. For retrofitting other manufacturers sloped ceiling cans always test the product to ensure proper fit and function.

Electrical:

- Driver connects to 120VAC power supply.
- High efficiency, high power factor > 0.9 driver.
- Ambient operating temperature -40°F (-40°C) to 104°F (40°C).

LED Technology:

- Accurate color rendering with 90+ CRI.
- Lumen Maintenance of 50,000 hours L70 Life based on LM80 standardized test results.
- Thermal management by utilizing aluminum diecast heat sink.

Dimmability:

- Dimmable with most standard TRIAC and ELV type dimmers.
- Dimming range of 100% down to 10%. Dimming range may vary depending on dimmer model.
- For full list of dimmers refer to the Dimmer Compatibility List.

Listings: UL Listed for Damp Location. California Title 24 (JA8-2025-E).

Warranty: ELCO Products are built to last. 5-year Limited warranty.

© ELCO Lighting 2026. All rights reserved • Rev. 22 Nov 2026 • ELCO Lighting reserves the right to make specification and design changes without notice.