ELCO Lighting

Project Name:

Fixture Type:

Date:

5″ PAINTED STEEL REMODEL HOUSING, MEDIUM BASE (E26)

Housing · 5 1/2″



ITEM NUMBER **RR5H**

FEATURES

- 5″ Remodel Housing.
- Unit slips through 5 1/2″ ceiling cut out. Integral flange secures fixture against ceiling.
- Integral thermal protector guards against improper lamping.
- Four remodel clips secure housing and accommodate various ceiling thickness.
- Adjustable socket bracket allows for different lamp types/sizes and proper and consistent lamp positioning.
- Pre-wired junction box provided with 1/2″ and 3/4″ knockouts and with removable access plates.
- Lamp: PAR.
- UL Listed (US and Canada) for damp location and for feed through.

SPECIFICATIONS

Wattage	75W
Voltage	120V
Lamp type	Medium Base (E26)
Aperture	5 1/2"

Item page
elcolighting.com/items/5-painted-steel-remodel-housing
Every item number, IES files, downloads and the latest revision.

DIMENSIONS

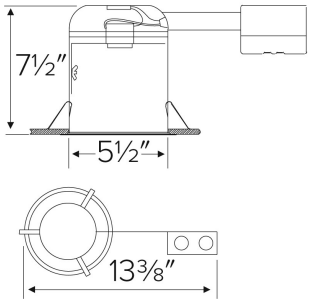

PART OF THESE FAMILIES

5″ LED Housings and Inserts

TECHNICAL DETAILS

Construction:

- Housing adjusts in frame to accommodate up to 1 1/4″ ceiling thickness.
- Aluminum housing for greater heat dissipation.

Installation: Designed for ceiling plenums where 2x8 joists or taller are used. Maximum hole cutout is 5 1/2″. See installation sheet for detailed information.

Electrical:

- Input Voltage: 120V AC.
- Thermally protected against improper lamping.

Trims: Compatible with ELCO 5″ Line Voltage PAR trims.
Lamp: Designed for use with Medium Base (E26) PAR lamps up to 75W.

Listings:

- UL Listed (US and Canada) for Damp Location.
- UL Listed (US and Canada) for Feed Through.

Warranty: ELCO Lighting warrants products will be free from defects in materials and workmanship for a period of 3 years.

© ELCO Lighting 2026. All rights reserved • Rev. 19 Oct 2026 • ELCO Lighting reserves the right to make specification and design changes without notice.