ELCO Lighting

Project Name:

Fixture Type:

Date:

5″ DEDICATED LED IC AIRTIGHT REMODEL HOUSING

Housing · 5″



ITEM NUMBER **EL570RICA**

FEATURES

•Single wall IC remodel construction, for use in insulated ceilings.
•CA Title 24 JA8-2025-E compliant (as high efficiency luminaire).
•Trims sold separately.
•Lamp: 24W Max 120V.
•cUL Listed for damp location and for feed through.
•Compatible with ELCO 5" LED Inserts.

DIMENSIONS

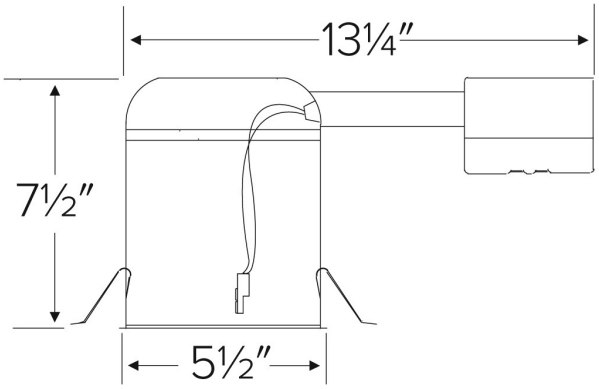

SPECIFICATIONS

Wattage	24W
Voltage	120-277V
Aperture	5"

Item page
elcolighting.com/items/5-dedicated-led-ic-airtight-remodel-housing
Every item number, IES files, downloads and the latest revision.

PART OF THESE FAMILIES

5″ LED Housings and Inserts · 5″ Standard Koto™

TECHNICAL DETAILS

Construction:
- Single wall IC rated for direct contact with insulation, for use in IC or non-IC conditions.
- Airtight housing with gasket to restrict airflow in accordance with ASTM E-283 air-tight requirements.
- Steel housing for greater heat dissipation.

Installation: Designed for ceiling plenums where 2x8 joists or taller joists are used. Maximum hole cutout is 5 1/2". See installation sheet for detailed information.

Electrical:
- Input Voltage: 120V AC.
- Inherently protected.

Dimmability:
- Dimmability based on lamp.

Lamp: Designed for use with ELCO 5" LED inserts, LED modules, or PSA37 with 5" MR16 trims.

Listings:
- UL Listed (US and Canada) for Damp Location.
- UL Listed (US and Canada) for Wet Location with select trims.
- UL Listed (US and Canada) for Feed Through.
- UL Listed (US and Canada) for Direct Contact with Insulation and Combustible Material.
- Airtight per ASTM E-283.
- Install a JA8-2025-E lamp for Title 24 Compliance.

Warranty: ELCO Lighting warrants products will be free from defects in materials and workmanship for a period of 5 years.

© ELCO Lighting 2026. All rights reserved • Rev. 19 Oct 2026 • ELCO Lighting reserves the right to make specification and design changes without notice.