ELCO Lighting

Project Name:

Fixture Type:

Date:

4″ SQUARE IC AIRTIGHT JUNCTION BOX WITH HANGER BARS FOR 2-HR FIRE RATED CEILINGS

Module · Square · 4″

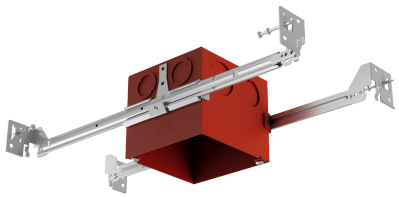

FEATURES

- UL listed per UL514A
- Maximum 2-Hour Fire Rated ceiling assembly can be maintained when installed according to the International Building Code, Section 714
- 4″ Square opening
- Swivel hanger bars for new construction mounting
- Low profile suits shallow plenum applications

DIMENSIONS

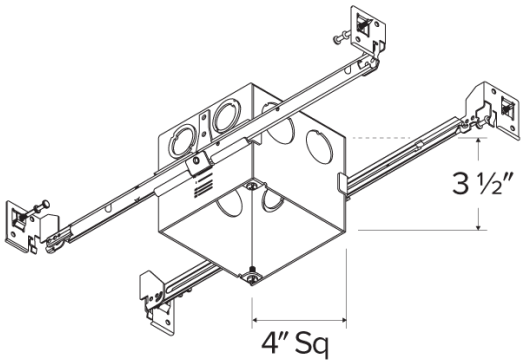

SPECIFICATIONS

Aperture	4"
Shape	Square
Length	4"
Size	4"

ITEM NUMBERS

ITEM NUMBER	LENGTH	SIZE
EJB44ICA	4"	4"

Item page
elcolighting.com/items/4-square-ic-airtight-junction-box-hanger-bars-2-hour-fire-rated-ceilings
Every item number, IES files, downloads and the latest revision.

PART OF THESE FAMILIES

4″ Square Junction Box LED Insert

TECHNICAL DETAILS

Installation: Designed for shallow ceiling plenums. High strength swivel hanger bars that can be nailed to joists.

Hanger Bars: Hanger bars with True Nail for easy installation in regular lumber, engineered lumber, and laminated beams. Integral T-bar slots for easy installation in T-Bars. Hanger bars span 24″. Score lines allow for tool-free hanger bar size reduction. Integral leveling flange allows for single-person installation while aligning housing with the joists.

Listings:
- IC Rated for direct contact with insulation
- For 2-Hr Fire Rated ceilings

Compatible With:

- LED Insert, LED Disk Lights, LED Sky™ Panels, and LED Ceiling Mount Fixtures

© ELCO Lighting 2026. All rights reserved • Rev. 23 Oct 2026 • ELCO Lighting reserves the right to make specification and design changes without notice.