ELCO Lighting

Project Name:

Fixture Type:

Date:

4" ROUND HIGH LUMEN LED REFLECTOR INSERT WITH 5-CCT SWITCH

Light Engine · Round · 4" · 3 finishes



This unique LED recessed downlight gives you the options you are looking for in one fixture. The manual switch located on the driver allows you to choose between 2700K, 3000K, 3500K, 4000K or 5000K.

FEATURES

- Switch from a 2700K to 5000K by using manual switch on driver
- Fits ELCO 4" Dedicated LED Recessed Housings, Regular and Shallow
- Soft white lens provides smooth lumen distribution and eliminates LED pixelation
- Deep set LED trim reduces glare while providing area illumination
- Includes Medium Base Adapter (PSA30) for retrofitting existing E26 Base housings
- ENERGY STAR® compliant
- Title 24 JA8-2025-E Compliant
- Life Span of 50,000 hours L70

DIMENSIONS

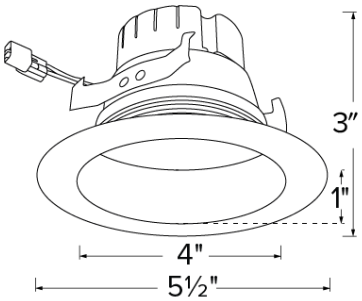

SPECIFICATIONS

Wattage	14W
Lumens	1000 lm
Voltage	120V
Color temp.	2700K-5000K
Dimming	Triac/ELV
Lamp type	LED
Beam angle	90°
CRI	90+
Aperture	4"
Shape	Round

FINISHES


White


Haze with White Ring


Black

Item page
elcolighting.com/items/4-round-high-lumen-led-reflector-insert-5-cct-switch
Every item number, IES files, downloads and the latest revision.

PART OF THESE FAMILIES

4" LED Housings and Inserts

↓ Dimmer compatibility list
elcolighting.com · 4" LED Inserts (2) Dimmer List

© ELCO Lighting 2026. All rights reserved • Rev. 01 Nov 2026 • ELCO Lighting reserves the right to make specification and design changes without notice.

PRODUCT NUMBER BUILDER

Specify **4" Round High Lumen LED Reflector Insert with 5-CCT Switch** item number (Select one) Example: **EL417CT5W** Your item number:

ITEM	CCT	FINISH
EL417		
	CT5 2700K-5000K	**W** White **H** Haze with White Ring **BB** Black

TECHNICAL DETAILS

Optics: Frosted polycarbonate lens diffuses light evenly throughout while reducing glare with LED Array technology.

Construction: For use in IC and non-IC housings. Spun Metal for greater heat dissipation. High quality powder coat finish preventing rust and paint cracking.

Installation: Includes PSA30 medium base adapter for retrofitting existing housings. Quick connect for use with ELCO housings EL490ICA, EL490RICA, EL492ICA, EL492RICA, EL48FICA. PSA30 (Medium Base Socket adapter) allows for use with EL99ICA, EL99RICA, EL99FICA, EL99A, EL99RA. PSA31 (GU10 Socket Adapter, not included) allows for use with EL49ICA, EL49A, EL49RA. Can be used in IC and non-IC housings.

Electrical: Driver connects to120V power supply. High Efficiency driver with a power factor > 0.9. Start time of less than .75 seconds.

LED Technology: 90+ CRI color rendering. Lumen Maintenance of 50,000 hours L70 Life based on LM80 standardized test results. Thermal management by utilizing integral heat sink. Instant On to Full Brightness. No LED pixelation.

Dimmability: Works with 120V Triac and ELV type dimmers. Dims down to 10%. For full list of dimmers refer to the Dimmer Compatibility List. Dims smoothly with no hot spots or flickering.

Listings: UL Listed (US and Canada) for Wet Location. RoHS Compliant. ENERGY STAR® compliant. Title 24 JA8-2025-E Compliant

Warranty: ELCO Products are built to last with a 5-year Limited Warranty.

© ELCO Lighting 2026. All rights reserved • Rev. 01 Nov 2026 • ELCO Lighting reserves the right to make specification and design changes without notice.