ELCO Lighting

Project Name:

Fixture Type:

Date:

4″ RETROFIT LED RECESSED DOWNLIGHTS WITH 5-CCT SWITCH

Canless LED · Round · 4″ · 3 finishes



Our 4" LED Recessed Downlights are designed for quick and easy installation without a housing for both new construction and remodel applications, gives you the options you are looking for in one fixture.

FEATURES

- IC Airtight for use with direct contact to insulation.
- Designed to fit in plenums as shallow as 3″.
- Eliminates the need for housing.
- OPTIONAL mounting frame available.
- Remodel applications require no additional accessories.
- Wet Location allows for use indoors or outdoors.
- Energy Star Certified
- Title 24 JA8-2025-E Compliant
- Includes driver and Jbox.
- For EM Backup use KEM-ERT

DIMENSIONS

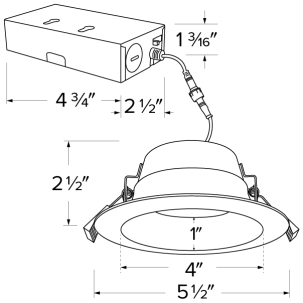

SPECIFICATIONS

Wattage	11W
Lumens	11W / 750 lm · 750 lm
Voltage	120V · 120-277-347V
Color temp.	2700K-5000K
Dimming	Triac/ELV · Triac/ELV/0-10V
Lamp type	LED
Beam angle	80°
CRI	90+
Aperture	4"
Shape	Round

FINISHES



White · Black · Bronze

Item page
elcolighting.com/items/4-retrofit-led-recessed-downlights-5-cct-switch
Every item number, IES files, downloads and the latest revision.

PART OF THESE FAMILIES

4″ Ply™ 0-10V Dimmable Retrofits · 4″ Elm™

⬇ Dimmer compatibility list

elcolighting.com · Elm System CCT LED Downlights Dimmer List

© ELCO Lighting 2026. All rights reserved • Rev. 01 Nov 2026 • ELCO Lighting reserves the right to make specification and design changes without notice.

PRODUCT NUMBER BUILDER

Specify **4" Retrofit LED Recessed Downlights with 5-CCT Switch** item number (Select one) Example: **ERT415CT5W** Your item number:

ITEM	LUMENS	CCT	VOLTAGE	FINISH
ERT4	**15** 11W / 750 lm[1] 750 lm	**CT5** 2700K-5000K	120V **DX** 120-277-347V[2]	**W** White **BB** Black **BZ** Bronze

[1] 120V, Triac/ELV [2] Available in ERT495CT5 only.

TECHNICAL DETAILS

Optics: Polycarbonate lens diffuses light evenly throughout space with no LED pixelation.

Construction: IC rated driver and fixture are tested and approved for direct contact with insulation. Plenum rated cable connector to connect from module to remote driver box. Isolated driver integrated inside aluminum remote box with two knockouts with slots for pryout.

Installation: Designed for super shallow ceiling plenums without any housing. High strength steel spring clip for easy installation. Hole cut out template provided for accurate hole size for proper trim installation. Cutout: Min: 4-1/8" - Max: 4-5/8". Suitable installation for t-grid and drop ceiling applications.

Electrical: Standard input wattage is 11W, 68 lumens per watt.

Dimmability: Works with 120V Triac/ELV type dimmers (ERT415 series). Or 120/277V with 0-10V dimminability on 120/277V and Triac/ELV on 120V side (ERT495 Series). Dims down to 10%. For full list of dimmers, refer to the Dimmer Compatability List.

Listings: ETL Listed for Wet Locations. IC-Rated for direct contact with insulation. Energy Star Certified. Title 24 JA8-2025-E Compliant

Warranty: 5-year limited warranty.

© ELCO Lighting 2026. All rights reserved • Rev. 01 Nov 2026 • ELCO Lighting reserves the right to make specification and design changes without notice.