ELCO Lighting

Project Name:

Fixture Type:

Date:

4″ MODULAR ELM™ SQUARE REFLECTOR TRIMS



Trim · Square · 2 finishes

Square reflector trims for the 4″ Modular Elm™ LED light engine (ERT4L10CT5). Choose a finish. Sold separately.

DIMENSIONS

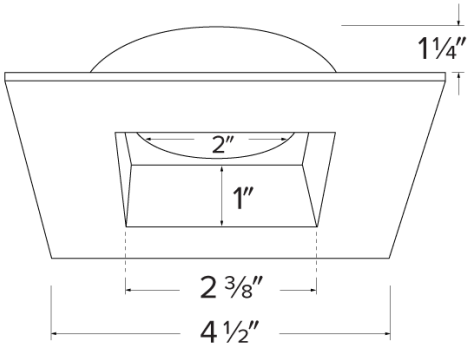

ERT445W Dimensions

SPECIFICATIONS

Shape	Square
Accessory option	Reflector

ITEM NUMBERS

ITEM NUMBER	FINISH	ACCESSORY OPTION	SHAPE
ERT445W	White	Reflector	Square
ERT445BB	Black	Reflector	Square

FINISHES

White



Black

Item page
elcolighting.com/items/4-modular-elm-square-reflector-trims
Every item number, IES files, downloads and the latest revision.

PART OF THESE FAMILIES

4″ Modular Elm™

© ELCO Lighting 2026. All rights reserved • Rev. 01 Oct 2026 • ELCO Lighting reserves the right to make specification and design changes without notice.