ELCO Lighting

Project Name:

Fixture Type:

Date:

4″ MODULAR ELM™ ROUND REFLECTOR TRIMS

Trim · Round · 2 finishes

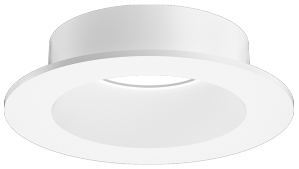

Round reflector trims for the 4″ Modular Elm™ LED light engine (ERT4L10CT5). Choose a finish. Sold separately.

DIMENSIONS

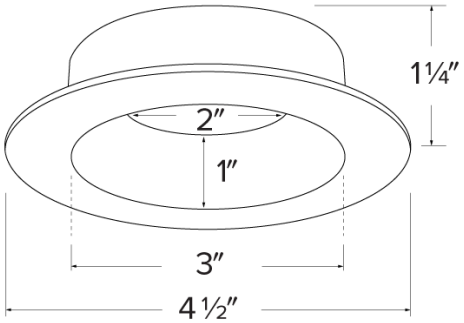

ERT415W Dimensions

SPECIFICATIONS

Shape	Round
Accessory option	Reflector

ITEM NUMBERS

ITEM NUMBER	FINISH	ACCESSORY OPTION	SHAPE
ERT415W	White	Reflector	Round
ERT415BB	Black	Reflector	Round

FINISHES



White



Black

Item page
elcolighting.com/items/4-modular-elm-round-reflector-trims
Every item number, IES files, downloads and the latest revision.

PART OF THESE FAMILIES

4″ Modular Elm™

© ELCO Lighting 2026. All rights reserved • Rev. 01 Oct 2026 • ELCO Lighting reserves the right to make specification and design changes without notice.