ELCO Lighting

Project Name:

Fixture Type:

Date:

4″ LOW VOLTAGE NEW CONSTRUCTION IC AIRTIGHT R-60 FOAM INSULATION HOUSING

Housing · 4 1/4″



ITEM NUMBER **EL1499AJICEA**

FEATURES

- Double Wall New Construction IC Airtight R-60 Foam Insulation Housing with 12V thermally protected electronic transformer
- Trims sold separately
- Lamp: 12W MAX, 12V, MR16 GU/GX5.3 bi-pin LED/Halogen (not included)
- Lamp Holder: MR16 GU/GX5.3 bi-pin socket
- Note: Use only dimmers specifically designed for use with electronic transformers
- Suitable for Chicago Plenum construction

DIMENSIONS

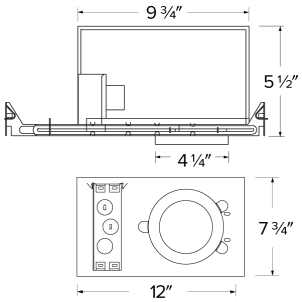

SPECIFICATIONS

Wattage	12W
Voltage	120V
Lamp type	GU5.3 BiPin
Aperture	4 1/4"
Transformer type	Electronic Transformer

Item page
elcolighting.com/items/4-low-voltage-new-construction-ic-airtight-r-60-foam-insulation-housing
Every item number, IES files, downloads and the latest revision.

PART OF THESE FAMILIES

4″ Low Voltage GU5.3 Housings and Trims

↓ Dimmer compatibility list
elcolighting.com · Dimmer Compatibility List

TECHNICAL DETAILS

Construction:

• Double wall IC rated for direct contact with insulation, for use in IC or non-IC conditions.

• Housing adjusts in frame to accommodate up to 1 1/4" ceiling thickness.

• Airtight housing with gasket to restrict airflow in accordance with ASTM E-283 air-tight requirements.

• Steel housing for greater heat dissipation. Stamped galvanized steel frame.

Installation: Designed for ceiling plenums where 2x6 joists or taller joists are used. High strength hanger bars can easily be nailed to joists. Maximum hole cutout is 4 1/4". Suitable for T-grid and drop ceiling applications. See installation sheet for detailed information.

Junction Box: Positioned to accommodate straight conduit runs. Two 3/4" knockouts slots.

Hanger Bars: Pre-installed hanger bars with True Nail facilitate easy installation in regular lumber, engineered lumber, and laminated beams. Integral T-bar slots for easy installation in T-bars. Spans up to 24" and can be repositioned 90°. Score lines allow for tool-free hanger bar size reduction. Integral leveling flange allows for single-person installation while aligning the housings with the joists.

Electronic Transformer: Input Voltage: 120V AC. Output Voltage: 12V AC. Thermally protected against improper lamping.

Trims: Compatible with ELCO 4" MR16 trims.

Dimmability:

- Electronic transformer dims with ELV type dimmers.
- See dimming compatibility list for a full list of compatible

© ELCO Lighting 2026. All rights reserved • Rev. 19 Oct 2026 • ELCO Lighting reserves the right to make specification and design changes without notice.

dimmers.

- Note: Lamp used may affect dimmability.

Lamp: Designed for use with GU5.3 MR16 LED lamps.

Listings: UL Listed (US and Canada) for Damp Location. UL Listed (US and Canada) for Wet Location with select trims. UL Listed (US and Canada) for Feed Through. UL Listed (US and Canada) for Direct Contact with Insulation and Combustible Material. Airtight per ASTM E-283. Install a JA8-2025-E lamp/luminaire for Title 24 Compliance.

Warranty: ELCO Lighting warrants this product will be free from defects in materials and workmanship for a period of 3 years.

© ELCO Lighting 2026. All rights reserved • Rev. 19 Oct 2026 • ELCO Lighting reserves the right to make specification and design changes without notice.