ELCO Lighting

Project Name:

Fixture Type:

Date:

4″ HOUSING FOR REMOTE TRANSFORMER FOR MR16 BI-PIN

Housing

ITEM NUMBER **E400**



FEATURES

- 4" Housing with MR16 Socket.
- Lamp: 12V 35W max MR16.
- Lamp Holder: GU5.3 Bi-Pin.
- Thermally protected.
- Can be used with most of the 4" low voltage trims (not included).
- Two side clips secure housing and accommodate various ceiling thicknesses.

SPECIFICATIONS

Wattage	35W
Voltage	12V
Lamp type	GU5.3 BiPin

Item page
elcolighting.com/items/4-housing-remote-transformer-mr16-bi-pin
Every item number, IES files, downloads and the latest revision.

DIMENSIONS

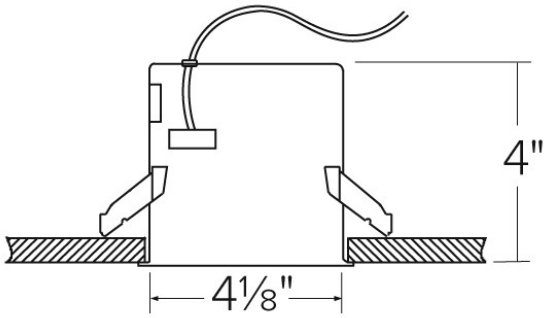

PART OF THESE FAMILIES

4″ Low Voltage GU5.3 Housings and Trims

Dimmer compatibility list

elcolighting.com · Dimmer Compatibility List

TECHNICAL DETAILS

Installation: Maximum hole cutout is 4 1/4". Suitable for T-grid and drop ceiling applications. See installation sheet for detailed information.

Electrical:

- Input Voltage: 12V AC (REQUIRES 12V AC Transformer, not included)
- Thermally protected against improper lamping.

Trims: Compatible with ELCO 4" MR16 trims.

Lamp: Designed for use with GU5.3 MR16 LED lamps.

Listings: UL Listed (US and Canada) for Damp Location.
Warranty: ELCO Lighting warrants products will be free from defects in materials and workmanship for a period of 3 years.

© ELCO Lighting 2026. All rights reserved • Rev. 19 Oct 2026 • ELCO Lighting reserves the right to make specification and design changes without notice.