ELCO Lighting

Project Name:

Fixture Type:

Date:

4″ GU10 LED REMODEL HOUSING

Housing · 4″



4" remodel housing for use with 120V GU10 MR16 LED lamps.

ITEM NUMBER **EL49LDRICA**

FEATURES

- Single wall IC construction, for use in insulated ceilings.
- Dimmable.
- Lamp: 120V, 12W MAX MR16 GU10 LED (not included).
- Lamp Holder: GU10 MR16.
- Trims sold separately.

DIMENSIONS

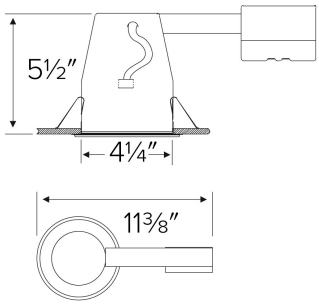

SPECIFICATIONS

Wattage	12W
Voltage	120V
Lamp type	GU10 LED
Aperture	4"

Item page
elcolighting.com/items/4-gu10-led-remodel-housing
Every item number, IES files, downloads and the latest revision.

PART OF THESE FAMILIES

4″ GU10 Housings and Trims

Dimmer compatibility list

elcolighting.com · Dimmer Compatibility List

TECHNICAL DETAILS

Construction:

- Single wall IC rated for direct contact with insulation, for use in IC or non-IC conditions.
- Housing adjusts in frame to accommodate up to 1 1/4" ceiling thickness.
- Airtight housing with gasket to restrict airflow in accordance with ASTM E-283 air-tight requirements.
- Steel housing for greater heat dissipation. Stamped galvanized steel frame.

Installation: Designed for ceiling plenums where 2x6 joists or taller joists are used. Maximum hole cutout is 4 1/4". Remodel clips secure housing, suitable for T-grid and drop ceiling applications. See installation sheet for detailed information.

Electrical:

- Input Voltage: 120V AC.
- Thermally protected against improper lamping.

Trims: Compatible with ELCO 4" MR16 trims.

Dimmability:

- Dimmability based on lamp.

Lamp: Designed for use with GU10 MR16 LED lamps.

Listings:

- UL Listed (US and Canada) for Damp Location.
- UL Listed (US and Canada) for Wet Location with select trims.
- UL Listed (US and Canada) for Feed Through.
- UL Listed (US and Canada) for Direct Contact with Insulation and Combustible Material.
- Airtight per ASTM E-283.
- Install a JA8-2025-E lamp/luminaire for Title 24 Compliance.

Warranty: ELCO Lighting warrants products will be free from defects in materials and workmanship for a period of 3 years.

© ELCO Lighting 2026. All rights reserved • Rev. 19 Oct 2026 • ELCO Lighting reserves the right to make specification and design changes without notice.