ELCO Lighting

Project Name:

Fixture Type:

Date:

4″ DIE-CAST SQUARE BAFFLE TRIM FOR PAR LAMPS

Trim

4" diecast square baffle trim. For use with PAR Lamps.

FEATURES

•4" Square Baffle
•Square trim recommended for New Construction Housings only
•Lamp: 50W PAR20
•Twist-on trim for the Poplar™ LED Module

DIMENSIONS

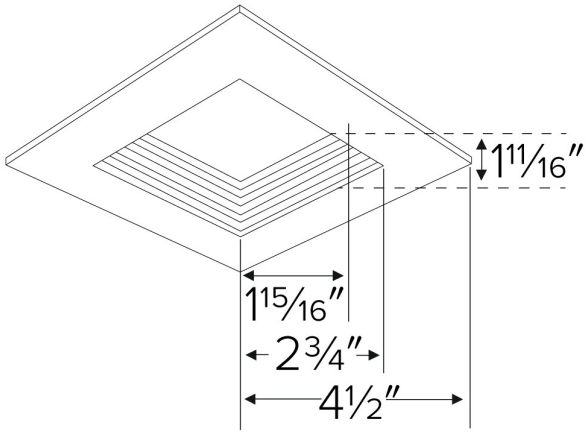

TECHNICAL DETAILS

Construction: Diecast aluminum with a powder-coated finish.
Compatible Housing: Compatible with 4” IC and Non-IC housings (non-shallow).
Lamp: For use with PAR Lamps.

FINISHES

White

Item page
elcolighting.com/items/4-die-cast-square-baffle-trim-par-lamps
Every item number, IES files, downloads and the latest revision.

PART OF THESE FAMILIES

4″ Poplar™ · 4″ Medium Base Housings & Trims

PRODUCT NUMBER BUILDER

Specify **4″ Die-cast Square Baffle Trim for PAR Lamps** item number (Select one) Example: **ELL4816W** Your item number:

ITEM	FINISH
ELL4816	
	W White

© ELCO Lighting 2026. All rights reserved • Rev. 19 Oct 2026 • ELCO Lighting reserves the right to make specification and design changes without notice.