ELCO Lighting

Project Name:

Fixture Type:

Date:

4" DIE-CAST ROUND WALL WASH TRIM FOR POPLAR™ MODULE



Trim

4" diecast round wall wash trim. For use with the Poplar™ module.

FEATURES

- 4" Round Wall Wash
- Lamp: PAR Lamps.

DIMENSIONS

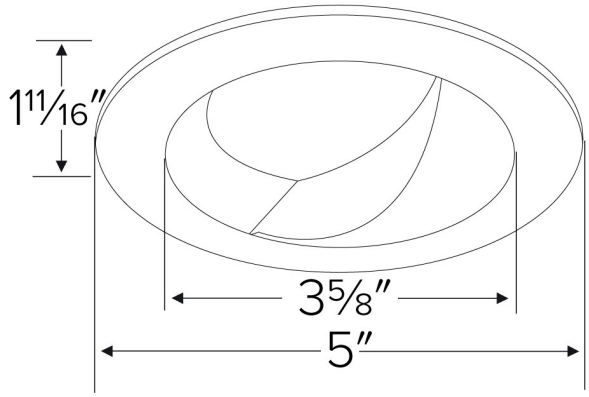

TECHNICAL DETAILS

Construction: Diecast aluminum with a powder-coated finish.
Compatible Housing: Compatible with 4” IC and Non-IC housings (non-shallow).
Lamp: For use with PAR Lamps.

FINISHES



White

Item page
elcolighting.com/items/4-die-cast-round-wall-wash-trim-par-lamps
Every item number, IES files, downloads and the latest revision.

PART OF THESE FAMILIES

4″ Poplar™

PRODUCT NUMBER BUILDER

Specify **4" Die-cast Round Wall Wash Trim for Poplar™ Module** item number (Select one) Example: **ELL4815W** Your item number:

ITEM	FINISH
ELL4815	
	W White

© ELCO Lighting 2026. All rights reserved • Rev. 18 Nov 2026 • ELCO Lighting reserves the right to make specification and design changes without notice.