ELCO Lighting

Project Name:

Fixture Type:

Date:

4″ DIE-CAST LENSED REFLECTOR TRIM

Trim

4" Diecast Round Steam Room Trim. For use with PAR Lamps.

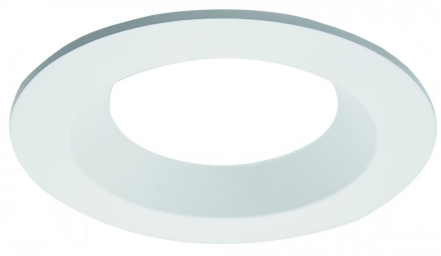

FEATURES

- 4" Round lensed Trim
- Lamp: 50W PAR20

DIMENSIONS

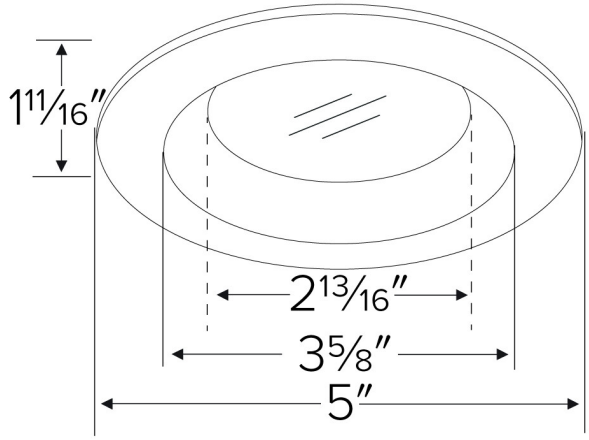

TECHNICAL DETAILS

Construction: Diecast aluminum with a powder-coated finish.
Compatible Housing: Compatible with 4” IC and Non-IC housings (non-shallow).
Lamp: PAR Lamps.

FINISHES

White

Item page
elcolighting.com/items/4-die-cast-lensed-reflector-trim
Every item number, IES files, downloads and the latest revision.

PART OF THESE FAMILIES

4″ Medium Base Housings & Trims

PRODUCT NUMBER BUILDER

Specify **4” Die-cast Lensed Reflector Trim** item number (Select one) Example: **ELL4812W** Your item number:

ITEM	FINISH
ELL4812	
	W White

2042 E. Vernon Ave., Vernon, CA 90058 • Tel (323) 231-2600 Fax (323) 231-3200 • elcolighting.com
© ELCO Lighting 2026. All rights reserved • Rev. 19 Oct 2026 • ELCO Lighting reserves the right to make specification and design changes without notice.