ELCO Lighting

Project Name:

Fixture Type:

Date:

4″ DIE-CAST DEEP ROUND REFLECTOR TRIM FOR PAR LAMPS

Trim

4" die-cast deep round reflector trim. For use with PAR Lamps.

FEATURES

- 4" Deep Round Reflector
- Lamp: For use with PAR Lamps.
- Twist-on trim for the Poplar™ LED Module

DIMENSIONS

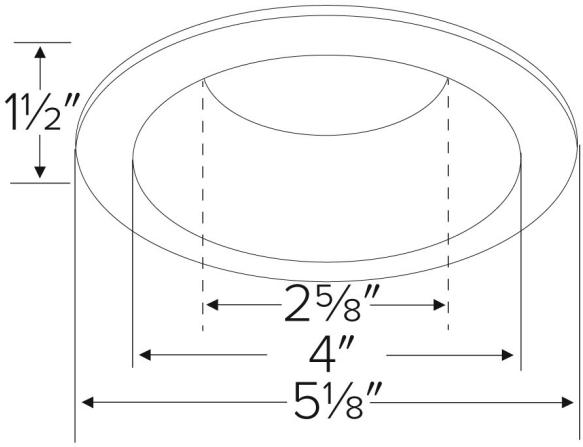

TECHNICAL DETAILS

Construction: Diecast aluminum with a powder-coated finish.
Compatible Housing: Compatible with 4” IC and Non-IC Housings (non-shallow).
Lamp: For use with PAR Lamps.

FINISHES



White

Item page
elcolighting.com/items/4-die-cast-deep-round-reflector-trim-par-lamps
Every item number, IES files, downloads and the latest revision.

PART OF THESE FAMILIES

4″ Poplar™

PRODUCT NUMBER BUILDER

Specify **4″ Die-cast Deep Round Reflector Trim for PAR Lamps** item number (Select one) Example: **ELL4817W** Your item number:

ITEM	FINISH
ELL4817	**W** White

© ELCO Lighting 2026. All rights reserved • Rev. 18 Nov 2026 • ELCO Lighting reserves the right to make specification and design changes without notice.