ELCO Lighting

Project Name:

Fixture Type:

Date:

4″ 0-10V REMODEL DEDICATED LED HOUSING

Housing · 4″



4" remodel dedicated LED housing. Compatible with 4" 0-10V LED inserts and 0-10V Koto™ Modules.

FEATURES

- Wired for 0-10V Dimming
- Single wall IC Airtight rated for Direct Contact with Insulation
- 120/277V Input
- Meets restricted air flow requirements (per ASTM E-283)
- UL Listed (US and Canada) for direct contact with Insulation
- UL Listed (US and Canada) for Damp Locations
- UL Listed (US and Canada) for Wet Location with Wet Location Rated Inserts
- UL Listed (US and Canada) for Feed Through
- CA Title 24 Compliant

DIMENSIONS

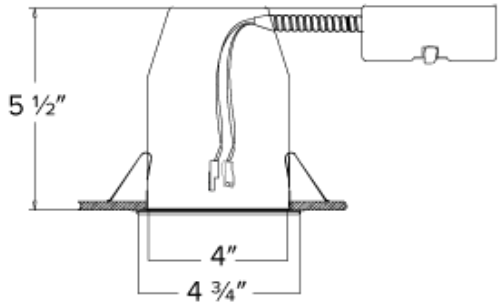

SPECIFICATIONS

Voltage	120-277V
Dimming	0-10V/Triac/ELV
Aperture	4"
Emergency option	Emergency Battery Backup · No Emergency Backup

ITEM NUMBERS

ITEM NUMBER	VOLTAGE	DIMMING	EMERGENCY OPTION
EL490RICDXA	120-277V	0-10V/Triac/ELV	No Emergency Backup
EL490RICDXA-EM5	120-277V	0-10V/Triac/ELV	Emergency Battery Backup

Item page
elcolighting.com/items/4-0-10v-remodel-dedicated-led-housing
Every item number, IES files, downloads and the latest revision.

PART OF THESE FAMILIES

4″ DX Koto™ · 4″ Poplar™ · 4″ Ply™ 0-10V LED Housings and LED Inserts

TECHNICAL DETAILS

Installation: Designed for ceiling plenums where 2x6 joists or taller joists are used. Maximum hole cutout is 4 1/4". Suitable for T-grid and drop ceiling applications. See installation sheet for detailed information.

Electrical: Input Voltage: 120/277V. Inherently protected.

Dimmability: Dimmability based on lamp.

Lamp: Designed for use with ELCO 4" 0-10V LED inserts and 0-10V Koto™ Module

Listings:

- UL Listed (US and Canada) for Damp Location.
- UL Listed (US and Canada) for Wet Location with select trims.
- UL Listed (US and Canada) for Feed Through.
- UL Listed (US and Canada) for Direct Contact with Insulation and Combustible Material.
- Airtight per ASTM E-283.
- Install a JA8-2025-E lamp/luminaire for Title 24 Compliance.

Warranty: ELCO Lighting warrants products will be free from defects in materials and workmanship for a period of 3 years.

© ELCO Lighting 2026. All rights reserved • Rev. 19 Oct 2026 • ELCO Lighting reserves the right to make specification and design changes without notice.