ELCO Lighting

Project Name:

Fixture Type:

Date:

2″ SQUARE REFLECTOR TEAK™ LED LIGHT ENGINE

Module · Square · 2″ · 6 finishes

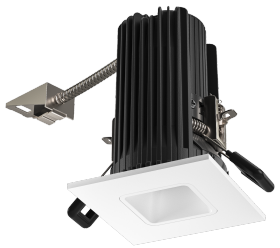

The Teak™ LED light engine is an IC Rated diecast construction specification grade 2″ LED downlight. Boasting an output up to 1100 lumens - more than a traditional 75W MR16 halogen lamp.

FEATURES

- Dimmable ELV, Triac or 0-10V depending on driver used.
- Same LED light engine for 850 and 1100 lumens (see housings)
- UL Listed (US and Canada) for Direct Contact with insulation
- Works with compatible ceilings up to 1¼″
- Height allows for use in ceilings with under 5″ depth. Ceiling thickness can be reduced from fixture depth.
- 38° Standard beam with optional 28° and 60°
- Wet Location Listed
- UL Listed (US and Canada), Meets California Title 24 JA8-2025-E and Energy Star standards.
- Life Span 50,000 Hours L70
- U.S. Pat. 10,125,959

DIMENSIONS

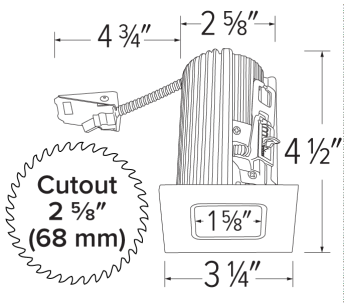

SPECIFICATIONS

Wattage	10.5 - 12
Lumens	800 lm - 1000 lm · 850 lm - 1100 lm
Color temp.	2700K · 3000K · 3500K · 4000K · Sunset
Lamp type	LED
Beam angle	38° · 28° · 60°
CRI	93+
Aperture	2"
Shape	Square

FINISHES



White



Bronze



Black

Black with White Ring

Chrome with White Ring

Haze with White Ring

Item page
elcolighting.com/items/2-square-reflector-teak-led-light-engine
Every item number, IES files, downloads and the latest revision.

PART OF THESE FAMILIES

Teak™

⬇ Dimmer compatibility list

elcolighting.com · Dimmer Teak System

© ELCO Lighting 2026. All rights reserved • Rev. 01 Nov 2026 • ELCO Lighting reserves the right to make specification and design changes without notice.

PRODUCT NUMBER BUILDER

Specify **2" Square Reflector Teak™ LED Light Engine** item number (Select one) Example: **E2L13F27W** Your item number:

ITEM	BEAM ANGLE	CCT	FINISH
E2L13	**F** 38° **NF** 28° **WF** 60°	**27** 2700K **30** 3000K **35** 3500K **40** 4000K **SD** Sunset[1]	**W** White **BZ** Bronze **BB** Black **B** Black with White Ring **C** Chrome with White Ring **H** Haze with White Ring

[1] Sunset, Dim to Warm technology, automatically transitions from 3000K to 1800K when dimmed

TECHNICAL DETAILS

Optics: PC Lens for even lumen distribution. Standard 38° lens. Optional 28° (EP716C) and 60° (EP718C) available.

Construction: Diecast construction for lasting quality and greater heat dissipation. High quality powder coat finish prevents rust and paint cracking.

Installation: All Teak™ LED Light Engines feature a patented trigger release clip that will depress as the module is being inserted, holding the module in place. Hole cutout size: 2-5/8" (68 mm). Teak™ LED Light engines require driver

LED Technology: 90+ CRI color rendering. Efficacy of up to 104 lumens per watt. Lumen Maintenance of 50,000 hours L70 based on LM80. Thermal management by utilizing diecast aluminum body as heat sink.

Sunset: Sunset color temperature is our dim-to-warm LED technology that allows the color temperature to become warmer as the product is dimmed. Our SUNSET items start at 3000K and go as low as 1800K when dimmed. For Sunset dim technology be sure to order an item with "Sunset" in the Color Temperature (CCT) attribute.

Electrical: Requires driver. Driver and housing can be specified with voltage (120V or 120/277V) and dimming (ELV/Triac or 0-10V/Triac/ELV).

Compatible Housings/Delivered Lumens: Teak™ Light Engines are compatible with 120/277V 0-10V/Triac/ELV or 120V Triac/ELV Teak™ Housings.

• E2LAJ08ICA, E2LAJ08ICAD, E2L08ICA, E2L08ICAD, E2L08RIC, E2L08RICD (10.5W, 120V)
2700K: 850 lm, 3000K: 850 lm, 3500K: 850 lm, 4000K: 850 lm, Sunset: 800 lm

• E2LAJ11ICA, E2LAJ11ICAD, E2L11ICA, E2L11ICAD, E2L11RIC, E2L11RICD (12.5W, 120/277V) 2700K: 1100 lm, 3000K: 1100 lm, 3500K: 1100 lm, 4000K: 1100 lm, Sunset: 1000 lm

Dimming: See Teak™ Housings and drivers for specific dimming information.

Listings: UL Listed (US and Canada). UL Listed (US and Canada) for WET Location. UL Listed (US and Canada) for direct contact with insulation. Airtight per ASTM E-283. Meets Energy Star and California Title 24 (JA8-2025-E) standards.

Warranty: ELCO Products are built to last with a 5-year Limited warranty.

Delivered

Lumens:

Delivered Lumens:

© ELCO Lighting 2026. All rights reserved • Rev. 01 Nov 2026 • ELCO Lighting reserves the right to make specification and design changes without notice.