ELCO Lighting

Project Name:

Fixture Type:

Date:

2″ SQUARE ADJUSTABLE LED LIGHT ENGINES

Light Engine · Square · 2″



FEATURES

- Suitable for use in fixtures installed in insulated ceilings.
- Suitable for new construction and remodel housings.
- Suitable for installation into ELCO 2″ recessed fixtures with 2-wire connector.
- Diecast construction provides lasting durability.
- 25° adjustability.
- Title 24 JA8-2025-E Compliant.

DIMENSIONS

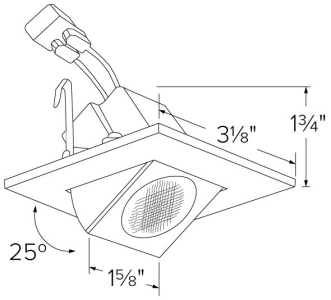

SPECIFICATIONS

Wattage	9W
Lumens	600 · 800 lm
Color temp.	2700K · 3000K · 3500K · 4000K
Dimming	Triac/ELV
Lamp type	LED
Beam angle	36°
CRI	90+
Aperture	2"
Shape	Square

FINISHES

White

Item page
elcolighting.com/items/2-square-adjustable-led-light-engines
Every item number, IES files, downloads and the latest revision.

PART OF THESE FAMILIES

Alder™

⬇ Dimmer compatibility list

elcolighting.com · 2" Alder LED Light Engines Dimmer List

© ELCO Lighting 2026. All rights reserved • Rev. 19 Oct 2026 • ELCO Lighting reserves the right to make specification and design changes without notice.

PRODUCT NUMBER BUILDER

Specify **2" Square Adjustable LED Light Engines** item number (Select one) Example: **E219C0627W** Your item number:

ITEM	LUMENS	CCT	FINISH
E219C			
	07 800 lm **06** 600 lm	**27** 2700K **30** 3000K **35** 3500K **40** 4000K	**W** White

No separate code: Lumens: 840 lm, 860 lm, 875 lm, 640 lm

TECHNICAL DETAILS

Optics: PC Lens for even lumen distribution.

Construction: Diecast construction for lasting quality and greater heat dissipation. High quality powder coat finish preventing rust and paint cracking.

Installation: Must be installed in ELCO 2" Alder System housing; E2LC106ICA, E2LC175ICA, E2LC175RICA, E2LC106, E2LRC106.

LED Technology:

- 90+ CRI color rendering.
- Efficacy of max. 93 lumens per watt.
- Lumen Maintenance of 50,000 hours L70 based on LM80 standardized test results.
- Thermal management by using the aluminum body as a heat sink.

Listings: UL Listed (US and Canada) for Damp Location. Title 24 JA8-2025-E Compliant.

Warranty: ELCO Products are built to last with a 5-year Limited warranty.

© ELCO Lighting 2026. All rights reserved • Rev. 19 Oct 2026 • ELCO Lighting reserves the right to make specification and design changes without notice.