ELCO Lighting

Project Name:

Fixture Type:

Date:

2″ NON-IC AIRTIGHT REMODEL HOUSING

Housing

ITEM NUMBER **E2LRC106**



FEATURES

- Height allows for use in 2x4 construction.
- Flexi-joint allows for easy installation and solid support.
- Driver included on housing.
- LED Light Engine sold separately.
- U.S. Patent 10,281,131

DIMENSIONS

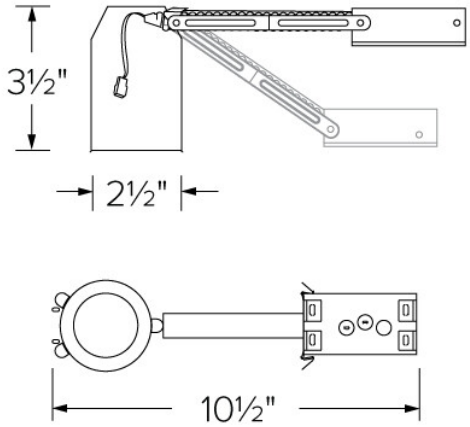

SPECIFICATIONS

Wattage	9W
Voltage	120V
Dimming	Triac/ELV
Housing type	Non-IC Airtight
Construction type	Remodel
Housing	Single Wall (9W)

Item page
elcolighting.com/items/2-non-ic-airtight-remodel-housing
Every item number, IES files, downloads and the latest revision.

PART OF THESE FAMILIES

Alder™

↓ Dimmer compatibility list

elcolighting.com · 2" Alder LED Light Engines Dimmer List

TECHNICAL DETAILS

Construction:

- Housing adjusts to accommodate up to 1 1/4″ ceiling thickness.
- Aluminum housing for greater heat dissipation.
- Driver mounted on junction box for cooler LED operation.

Installation: Designed for shallow ceiling plenums where 2x4 joists or taller are used. Maximum hole cutout is 2 5/8″. Suitable for T-grid and drop ceiling applications. See installation sheet for detailed information.

Electrical: Driver connects to 120V power supply. High Efficiency driver with a power factor > 0.9.

Dimmability: Works with 120V Triac and ELV type dimmers. Dims down to 10%. For full list of dimmers refer to the Dimmer Compatibility List.

Trims: Compatible with - E210C06, E213C06, E214C06, E215C06, E218C06, E219C06 series.

Listings: UL Listed (US and Canada) for Wet Location. UL Listed (US and Canada) for Feed Through. Meets restricted airflow requirements (per ASTM E-283).

Warranty: ELCO Products are built to last with a 5-year Limited warranty.

© ELCO Lighting 2026. All rights reserved • Rev. 19 Oct 2026 • ELCO Lighting reserves the right to make specification and design changes without notice.