ELCO Lighting

Project Name:

Fixture Type:

Date:

2″ LED ROUND REFLECTOR WITH 5-CCT SWITCH

Downlight · Round



FEATURES

- IC rated for direct connect with insulation
- 8W (ERT210CT5W) / 8.8W (ERT230CT5W)
- CRI 90+
- 120V
- ETL listed
- ENERGY STAR compliant.
- Dimmable Triac/ELV (dims to 10% on most dimmers)
- Cutout 2 5/8″ (65mm)
- For EM Backup use KEM-ERT
- Warranty: 5 years limited.

DIMENSIONS

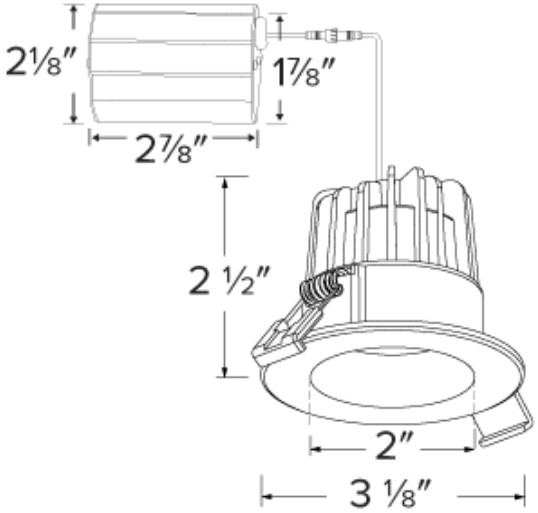

SPECIFICATIONS

Wattage	8 · 8.8 W
Lumens	550 · 1000 lm
Voltage	120V
Color temp.	2700K-5000K
Dimming	Triac/ELV
Lamp type	LED
CRI	90+
Shape	Round

FINISHES

White

Item page
elcolighting.com/items/2-led-round-reflector-5-cct-switch
Every item number, IES files, downloads and the latest revision.

PART OF THESE FAMILIES

2″ Elm™

PRODUCT NUMBER BUILDER

Specify **2″ LED Round Reflector with 5-CCT Switch** item number (Select one) Example: **ERT210CT5W** Your item number:

ITEM	CCT	FINISH
ERT2		
	CT5 2700K-5000K	**W** White

© ELCO Lighting 2026. All rights reserved • Rev. 19 Oct 2026 • ELCO Lighting reserves the right to make specification and design changes without notice.