ELCO Lighting

Project Name:

Fixture Type:

Date:

2″ IC AIRTIGHT REMODEL HOUSING

Housing

ITEM NUMBER **E2LC175RICA**



FEATURES

- Single Wall IC.
- Height allows for use in 2x4 construction.
- Flexi-joint allows for easy installation and solid support.
- Driver included on housing.
- CA Title 24 compliant (JA8-2025-E).
- LED Light Engine sold separately.
- U.S. Patent 10,281,131.

DIMENSIONS

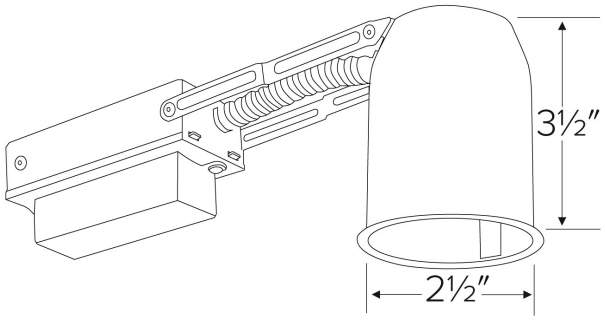

SPECIFICATIONS

Wattage	9W
Voltage	120V
Dimming	Triac/ELV
Housing type	IC Airtight
Construction type	Remodel
Housing	Single Wall (9W)

Item page
elcolighting.com/items/2-ic-airtight-remodel-housing
Every item number, IES files, downloads and the latest revision.

PART OF THESE FAMILIES

Alder™

↓ Dimmer compatibility list

elcolighting.com · 2" Alder LED Light Engines Dimmer List

TECHNICAL DETAILS

Construction:

- IC Rated for Direct Contact with Insulation, for use in IC and non-IC conditions.
- Housing adjusts to accommodate up to 1 1/4″ ceiling thickness.
- Aluminum housing for greater heat dissipation.
- Driver mounted on junction box for cooler LED operation.

Installation: Designed for shallow ceiling plenums where 2x4 joists or taller are used. Maximum hole cutout is 2 5/8″. Suitable for T-grid and drop ceiling applications. See installation sheet for detailed information.

Electrical: Driver connects to 120V power supply. High Efficiency driver with a power factor > 0.9.

Dimmability: Works with 120V Triac and ELV type dimmers. Dims down to 10%. For full list of dimmers refer to the Dimmer Compatibility List.

Trims: Compatible with - E210C06, E213C06, E214C06, E215C06, E218C06, E219C06 series.

Listings: UL Listed (US and Canada) for Wet Location. UL Listed (US and Canada) for Direct Contact with Insulation and Combustible Material. UL Listed (US and Canada) for Feed Through. Meets restricted airflow requirements (per ASTM E-283). Meets California Title 24 (JA8-2025-E) standards.

Warranty: ELCO Products are built to last with a 5-year Limited warranty.

© ELCO Lighting 2026. All rights reserved • Rev. 19 Oct 2026 • ELCO Lighting reserves the right to make specification and design changes without notice.