ELCO Lighting

Project Name:

Fixture Type:

Date:

2″ HIGH LUMEN LED ROUND DOWNLIGHT WITH 5-CCT SWITCH

Downlight · Round · 2″



Energy-efficient Elm™ System LED Downlights featuring 5-CCT Switch to choose desired color temperature (2700K-5000K), and maximum flexibility by mix-&-matching any round or square trim (sold separately) with desired reflector or baffle finish.

FEATURES

- Mix-&-Match Choosing Between Baffle or Reflector and Flexa™ Round or Square Trim (Sold separately)
- Baffle, Reflector, and Trims available in White, Black, Haze & Bronze color finishes (Sold separately)
- Compatible with Universal Frame only
- IC Rated for Direct Connect with Insulation
- 120V
- 5-CCT Switch
- CRI 90+
- ETL listed
- Triac/ELV Dimmable (dims to 10% on most dimmers)
- Warranty: 5 years limited.

DIMENSIONS

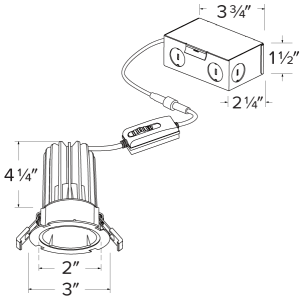

SPECIFICATIONS

Wattage	12 · 15 W
Lumens	850 · 1000 lm
Voltage	120V
Color temp.	2700K-5000K
Dimming	Triac/ELV
Lamp type	LED
Beam angle	38°
CRI	90+
Aperture	2"
Shape	Round

Item page
elcolighting.com/items/2-high-lumen-led-round-downlight-5-cct-switch
Every item number, IES files, downloads and the latest revision.

PART OF THESE FAMILIES

2″ Elm™ Flexa

↓ Dimmer compatibility list

elcolighting.com · Elm System LED Downlights Dimmer List

© ELCO Lighting 2026. All rights reserved • Rev. 01 Nov 2026 • ELCO Lighting reserves the right to make specification and design changes without notice.

PRODUCT NUMBER BUILDER

Specify **2" High Lumen LED Round Downlight with 5-CCT Switch** item number (Select one) Example: **ERT2HL08CT5** Your item number:

ITEM	LUMENS	CCT
ERT2HL		
	08 850 lm (12W) **10** 1000 lm (15W)	**CT5** 2700K-5000K

© ELCO Lighting 2026. All rights reserved • Rev. 01 Nov 2026 • ELCO Lighting reserves the right to make specification and design changes without notice.