ELCO Lighting

Project Name:

Fixture Type:

Date:

2″ EXTENSION COLLAR FOR KOTO™ HOUSINGS

Accessory



2″ Koto™ Housing Ceiling Extension Collar to be used with the 2″ Koto™ New Construction Housings

ITEM NUMBER **ELK2X-125**

FEATURES

- It allows the housing to install in ceiling thicknesses up to 1.25″.
- Not compatible with Canless Koto™ system.
- Compatible housings:
  EL276ICA, EL276ICDXA, E2LK34ICA, E2LK41ICA, E2LK94ICA, E21KT10ICAD

DIMENSIONS

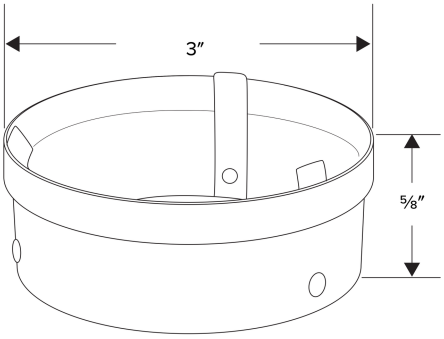

2″ Extension Collar for Koto™ Housings

Item page
elcolighting.com/items/2-extension-collar-koto-housings
Every item number, IES files, downloads and the latest revision.

PART OF THESE FAMILIES

2″ DX Koto™ · 2″ Architectural Koto™ · 2″ Standard Koto™ · 2″ Koto™ Aim

© ELCO Lighting 2026. All rights reserved • Rev. 06 Nov 2026 • ELCO Lighting reserves the right to make specification and design changes without notice.