ELCO Lighting

Project Name:

Fixture Type:

Date:

12V LED LOW VOLTAGE BI-PIN LAMP

Lamp

ITEM NUMBER **MR16LD**



FEATURES

• MR16 LED lamp with G5.3 base, dimmable.

DIMENSIONS

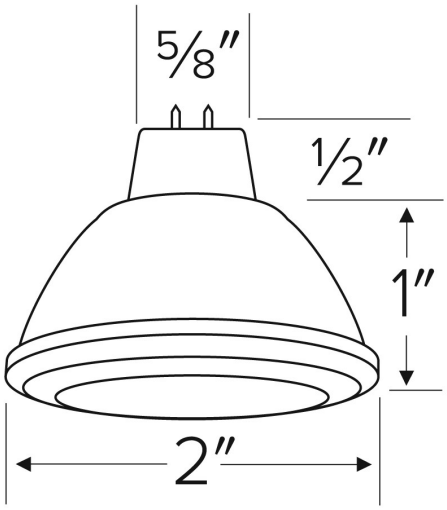

SPECIFICATIONS

Wattage	7W
Lumens	500 lm
Voltage	12V
Color temp.	3000K
Lamp type	MR16
CRI	80+

Item page
elcolighting.com/items/12v-led-low-voltage-bi-pin-lamp
Every item number, IES files, downloads and the latest revision.

PART OF THESE FAMILIES

Lamps

© ELCO Lighting 2026. All rights reserved • Rev. 16 Oct 2026 • ELCO Lighting reserves the right to make specification and design changes without notice.