ELCO Lighting

Project Name:

Fixture Type:

Date:

120V SHORT NECK PAR30 LED LAMP E26

Lamp

ITEM NUMBER **PAR30FSLD**



FEATURES

• PAR30 LED lamp with medium base, dimmable.

DIMENSIONS

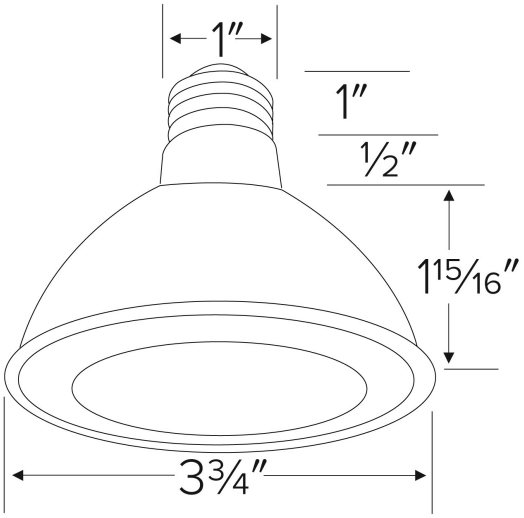

SPECIFICATIONS

Wattage	10W
Lumens	800 lm
Voltage	120V
Color temp.	3000K
Lamp type	PAR
Beam angle	Flood
CRI	90+

Item page
elcolighting.com/items/120v-short-neck-par30-led-lamp-e26
Every item number, IES files, downloads and the latest revision.

PART OF THESE FAMILIES

Lamps

© ELCO Lighting 2026. All rights reserved • Rev. 24 Jun 2026 • ELCO Lighting reserves the right to make specification and design changes without notice.