ELCO Lighting

Project Name:

Fixture Type:

Date:

120V LINE VOLTAGE UNIVERSAL TRACK FIXTURE

PAR20 · 2 finishes



FEATURES

- For use with 1 or 2 circuit track and accessories.
- Lamp: 120V 50W PAR16, PAR20, PAR30, 150W PAR38.
- This track head comes standard as H Style. J (Juno) and L (Lightolier) styles are available: For J style please order PJTHI (W/B) with the track head. For L style please order PLTHI (W/B) with the track head. Note these must be factory installed.

DIMENSIONS

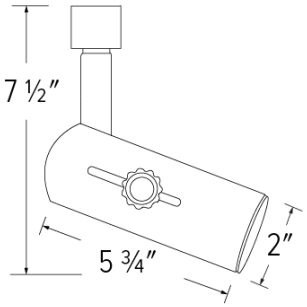

SPECIFICATIONS

Wattage	150W
Voltage	120V
Lamp type	Medium Base (E26)

ITEM NUMBERS

ITEM NUMBER	LAMP TYPE	WATTS	VOLTAGE	FINISH
ET641B	Medium Base (E26)	150W	120V	Black
ET641W	Medium Base (E26)	150W	120V	White

FINISHES


Black


White

Item page
elcolighting.com/items/120v-line-voltage-universal-track-fixture
Every item number, IES files, downloads and the latest revision.

PART OF THESE FAMILIES

PAR20 Line Voltage Track Lighting · PAR30 Line Voltage Track Lighting · PAR38 Line Voltage Track Lighting

TECHNICAL DETAILS

Construction: Track fixture with a powder coated finish.

Adjustability: Track head is adjustable 180° vertically with 358° rotation.

Lamp: Compatible with LED and non-LED PAR16, PAR20, PAR30 and PAR38 lamps (not included).

Installation: Installs into H-Style track from ELCO or others. Compatible with Single and two circuit track. Can be special ordered as J-Style (requires PJTLI W/B) or L-Style (requires PLTLI W/B).

© ELCO Lighting 2026. All rights reserved • Rev. 13 Oct 2026 • ELCO Lighting reserves the right to make specification and design changes without notice.

Socket: High quality Porcelain socket, jacketed aluminum screw shell, medium-base (E26) socket.

Dimmability: Triac and ELV dimmable based on lamp.

Listings:

- ETL Listed
- RoHS Compliant

© ELCO Lighting 2026. All rights reserved • Rev. 13 Oct 2026 • ELCO Lighting reserves the right to make specification and design changes without notice.