ELCO Lighting

Project Name:

Fixture Type:

Date:

1″ KOTO™ MINI TRIMLESS MINI ADJUSTABLE

Trim · 2 finishes



DIMENSIONS

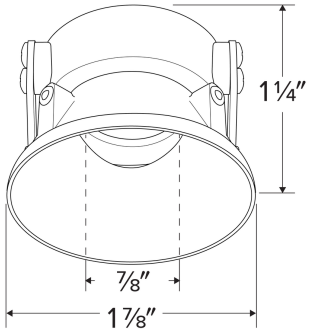

1″ Koto™ Mini Trimless Mini Adjustable

ITEM NUMBERS

ITEM NUMBER	FINISH
EMN1RD29TLBB	Black
EMN1RD29TLW	White

FINISHES



Black



White

Item page
elcolighting.com/items/1-koto-mini-trimless-mini-adjustable
Every item number, IES files, downloads and the latest revision.

PART OF THESE FAMILIES

Koto™ Mini

© ELCO Lighting 2026. All rights reserved • Rev. 01 Nov 2026 • ELCO Lighting reserves the right to make specification and design changes without notice.