ELCO Lighting

Project Name:

Fixture Type:

Date:

1″ KOTO™ MINI SINGLE HEAD NEW CONSTRUCTION IC AIRTIGHT R60 AND CHICAGO PLENUM HOUSING

Housing

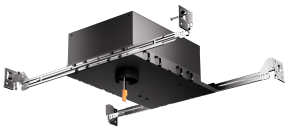

DIMENSIONS

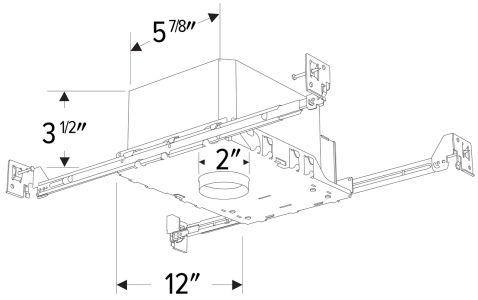

1″ Koto™ Mini Single Head New Construction IC Airtight R60 and Chicago Plenum Housing

SPECIFICATIONS

Housing type	IC Airtight, R60 & Chicago Plenum
Heads	Single Head

Item page
elcolighting.com/items/1-koto-mini-single-head-new-construction-ic-airtight-r60-and-chicago-plenum-housing
Every item number, IES files, downloads and the latest revision.

PART OF THESE FAMILIES

Koto™ Mini

PRODUCT NUMBER BUILDER

Specify **1″ Koto™ Mini Single Head New Construction IC Airtight R60 and Chicago Plenum Housing** item number (Select one) Example: **EMN175AJICA** Your item number:

ITEM	HOUSING TYPE
EMN175AJICA	
	AJICA IC Airtight, R60 & Chicago Plenum

© ELCO Lighting 2026. All rights reserved • Rev. 13 Oct 2026 • ELCO Lighting reserves the right to make specification and design changes without notice.