ELCO Lighting

Project Name:

Fixture Type:

Date:

1″ KOTO™ MINI SINGLE HEAD NEW CONSTRUCTION IC AIRTIGHT HOUSING

Housing



DIMENSIONS

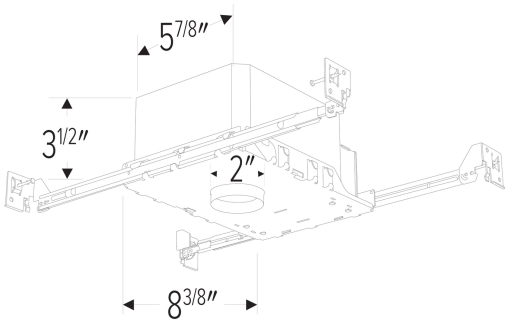

1″ Koto™ Mini Single Head New Construction IC Airtight Housing

SPECIFICATIONS

Heads	Single Head
Housing type	IC Airtight

Item page
elcolighting.com/items/1-ic-airtight-new-construction-housings
Every item number, IES files, downloads and the latest revision.

PART OF THESE FAMILIES

Koto™ Mini

PRODUCT NUMBER BUILDER

Specify **1″ Koto™ Mini Single Head New Construction IC Airtight Housing** item number (Select one) Example: **EMN175ICA** Your item number:

ITEM	HOUSING TYPE
EMN175ICA	
	ICA IC Airtight

© ELCO Lighting 2026. All rights reserved • Rev. 13 Oct 2026 • ELCO Lighting reserves the right to make specification and design changes without notice.