ELCO Lighting

Project name:

Fixture type:

Date:

SAGE LED Undercabinet Lightbar

Features

- 1"H x 1"W
- End to end connector and mounting brackets included
- Linkable up to 40ft.
- Polycarbonate lens
- 120V Dimmable
- ETL Listed
- ENERGY STAR qualified

Specifications

Wattage	5W - 20W
Lumens	300 lm - 1200 lm
Voltage	120V
Color Temp.	2700K, 3000K, 3500K, 4000K, 5000K - 3000K
CRI	90+

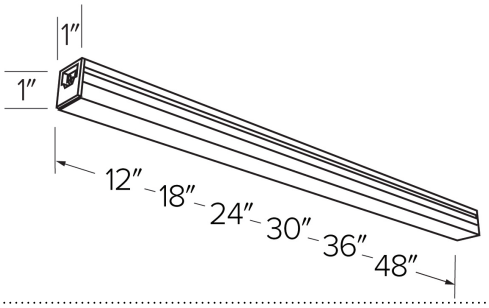

Product Numbers

Item	Description	Lumens	CCT	Watts	Voltage	Finish
EUD32CT5W	12"	300 lm	2700K, 3000K, 3500K, 4000K, 5000K	5W	120V	All White
EUD3330W	18"	500 lm	3000K	8W	120V	All White
EUD34CT5W	24"	600 lm	2700K, 3000K, 3500K, 4000K, 5000K	10W	120V	All White
EUD3530W	30"	720 lm	3000K	12W	120V	All White
EUD36CT5W	36"	900 lm	2700K, 3000K, 3500K, 4000K, 5000K	15W	120V	All White
EUD3730W	48"	1200 lm	3000K	20W	120V	All White

2042 E. Vernon Ave., Vernon, CA 90058 • Tel (323) 231-2600 Fax (323) 231-3200 • elcolighting.com
© ELCO Lighting 2024. All rights reserved • Rev. 08 Feb 2024 • ELCO Lighting reserves the right to make specification and design changes without notice.

Compatible Products

Sage® LED Undercabinet Light

ELCO Lighting

Accessories

6′ Power Cord

CAT NO.	SPECIFICATIONS
EUDCRD	6′ Length

End-to-End Connector

CAT NO.	SPECIFICATIONS
EUDCS31	

6″ Linking Cable

CAT NO.	SPECIFICATIONS
EUDC31	

Junction Box

CAT NO.	SPECIFICATIONS
EUDJBX	White

© ELCO Lighting 2024. All rights reserved • Rev. 08 Feb 2024 • ELCO Lighting reserves the right to make specification and design changes without notice.

Dimmer Compatibility Chart
Undercabinet
EUD Series

For Reference Only

Testing conducted by ELCO Lighting is not a substitute for and does not imply certification by an independent laboratory or any other standards certification. Refer to manufacturer specifications for more detailed information on product certifications and standards. Consult the dimmer manufacturer prior to installation to ensure compatibility.

Manufacturer	Product	Part Number	Dimmed Light Output Range
120V Only			
Legrand	CFL/LED Multi-way Paddle Dimmer	HDCL-453	10% - 100%
Leviton	IllumaTech Single Pole/3-Way Preset Electro-Mechanical Electronic Low Voltage Slide Dimmer	IPE04	10% - 100%
	Decora SureSlide® Single Pole/3-Way with Present ON/OFF Switch	6674	5% - 90%
Lutron	Rotary Dim N Glo 600W 3-Way Dimmer	DNG-603PH	10% - 100%
	DIVA® (Gloss) 450W, Single Pole, Magnetic Low Voltage Dimmer	DVLV-600P	10% - 100%
	DIVA® Series 600W Single Pole Dimmer	DV-600P	10% - 100%
	DIVA® Series 150W Single Pole/3-Way Dimmer	DVCL-153P	5% - 86%
	Maestro® Series 150W Single Pole/3-Way/Multi-Location Dimmer	MACL-153M	5% - 80%
	DIVA® (Gloss) 600W 3-Way Preset Eco-dim Dimmer	DV-603PG	10% – 100%

*NOTE: Refer to dimmer manufacturer's documentation for installation instructions and circuit details

Disclaimer: Minimum and maximum loads for LEDs and CFLs are given in number of lamps and may vary depending on the lamp being used. Testing conducted by ELCO Lighting is not a substitute for and does not imply certification by an independent laboratory or any other standards certification. Refer to manufacturer specifications for more detailed information on product certifications and standards.

2042 E. Vernon Ave. Vernon CA 90058 Tel 323.231.2600 Fax 323.231.3200 elcolighting.com

© ELCO Lighting 2024. All rights reserved • Rev. 08 Feb 2024 • ELCO Lighting reserves the right to make specification and design changes without notice.